Maintenance Manual

Old Marengo Park

Cover photo: Old Marengo Park, September 2009, photo by: Barbara Eisenstein

Old Marengo Park

MAINTENANCE MANUAL

Prepared for the

Arroyos & Foothills Conservancy

Prepared by

Ellen Mackey
Los Angeles & San Gabriel Rivers Watershed Council
Metropolitan Water District of Southern California
www.lasgrwc.org

with Barbara Eisenstein
www.weedingwildsuburbia.com

June 2010

Disclaimers

The Los Angeles and San Gabriel Rivers Watershed Council (Watershed Council) prepared this manual for the Arroyos & Foothills Conservancy (Conservancy), a California 501(c)(3) non-profit corporation.

In the preparation of this report, every effort has been made to offer the most current, correct, and clearly expressed information possible. Nevertheless, inadvertent errors in information may occur. In particular but without limit, the Watershed Council and the Conservancy disclaim any responsibility for typographical errors and other inadvertent errors in the information contained in this report. If misleading, inaccurate, or otherwise inappropriate information is brought to the attention of the authors, a reasonable effort will be made to fix or remove it in a future edition.

Methods and products discussed in this report are not necessarily suitable for use in all situations. The Watershed Council and the Conservancy do not represent or warrant that the methods and products discussed herein are suitable for particular applications. Persons using methods or products described in this manual should independently verify that the method or product is suitable and safe for the particular situation in which use of the method or product is proposed.

By using the information in this report, you assume all risks associated with the use of referenced methods and products discussed herein. The Watershed Council and the Conservancy shall not be liable (together or separately) for any special, incidental, or consequential damages, including, without limitation, injuries or lost revenues, resulting from the use or misuse of the information contained in this report.

Reference herein to any specific commercial products, process, or service by trade name does not necessarily constitute or imply its endorsement, recommendation, or favoring by the Watershed Council or the Conservancy. The views and opinions of the author expressed herein do not necessarily state or reflect those of the Watershed Council or the Conservancy, and may not be used for advertising or product endorsement purposes.

How to cite this document:

Mackey, Ellen and Barbara Eisenstein. 2010. *Old Marengo Park Maintenance Manual.* Prepared for the Arroyos and Foothills Conservancy. Los Angeles & San Gabriel Rivers Watershed Council, Los Angeles, California. 67 pages.

Acknowledgements

The Arroyos &Foothills Conservancy would like to thank the many partners and contributors without whom this project would not have been built:

North East Trees

Made Possible by:

Michael D. Antonovich, LA County Supervisor, 5th District
LA County Regional Park and Open Space District
Metropolitan Water District of Southern California
County of Los Angeles Department of Public Works
City of Pasadena Water & Power
Mountain View Cemetery
Altadena Heritage
Neighborhood Unitarian Universalist Church
Foothill Municipal Water District
Rain Bird Corporation
J. Harold Mitchell Co.

Designed and built by:

Arroyos & Foothills Conservancy
Altadena Watershed Committee

With Help From:

Neighbors at Marengo and Woodbury
Friends of the Arroyos &Foothills Conservancy
Los Angeles & San Gabriel Rivers Watershed Council
Lincoln Avenue Water Company
PB Construction
Galvan and Sons
El Nativo Growers

Table of Contents

From the preparer: The responsibility for the park maintenance will pass through many hands throughout the life of this project. We hope to lose none of the initial planning and work accomplished to create this new garden. This manual has many functions: to summarize the history of the project, to train future caretakers to maintenance procedures for this park, to educate docents and those wishing to create manuals for other parks, and provide a baseline for those who wish to monitor the progress of this park.

1. INTRODUCTION

Location and History

The Old Marengo Park lies at the border of Pasadena and Altadena, on the southwest corner of Woodbury Road and Marengo Avenue. This 8,000 square foot, gently sloping triangle was created in 1965 when Los Angeles County realigned Marengo. For 40 years this parcel remained a dirt and gravel unimproved eyesore. Although often perceived to be in Pasadena, the land is in the unincorporated community of Altadena; Pasadena actually begins 500 feet south of this section of Woodbury. Neighbors living on "Old Marengo," a cul de sac created by the realignment, have long lived with this dirt lot bordering their houses.

The Arroyos & Foothills Conservancy, a 501(c)(3) non-profit corporation, and the Altadena Watershed Committee, a community organization, designed and installed a water-wise oak woodland pocket park for this old county right-of-way. In 2007 the Conservancy received funding to realize the vision from the Metropolitan Water District's City Makeover Program. Additional major funding was received through a Proposition A grant from the LA County Park and Open Space District see acknowledgements for other significant funders). The oak woodland references nearby mountains and appears to pull a piece of upland habitat down to the urban Altadena/ Pasadena border. From construction through realization, the park demonstrates sustainable gardening practices including the use of native and "California friendly" plantings, as well as stormwater infiltration and supplementary irrigation, to create a uniquely California landscape. The park reflects the historical and natural heritage of Altadena and Pasadena, and acts as an informal gateway between the two communities.

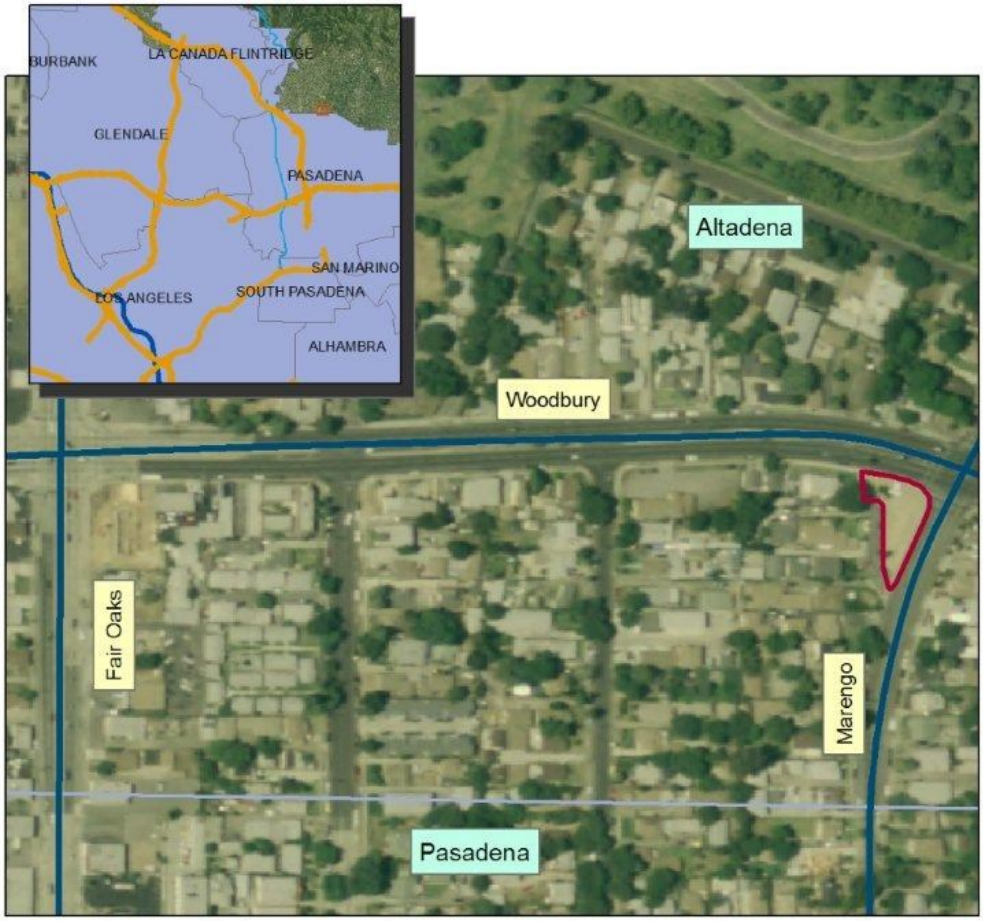

Marengo Street Pocket Park

Design

The designers sought to turn this unused barren triangle into an oak woodland "mini watershed" that infiltrates rain onsite, and demonstrates the use of native and other water-wise plantings. Hardscape elements including arroyo boulders, river boulder retaining walls, and decomposed granite paths are redolent of Early California and Arroyo Culture. The woodland plantings reference nearby mountains. The park has become habitat for birds and insects, while providing comfortable shade for visitors, and improving a modest neighborhood.

This is a small space that seeks to inspire big ideas about creating beauty with both native and other water-wise plantings — in fact its very scale, akin to what many home-owners have to work with, connects gardeners to the possibility of creating their own authentic California outdoor spaces. Low retaining walls and flat-topped boulders serve as informal seating. Although too small to be a major public meeting space, the park is big enough for gatherings of 20 to 30 people.

Irrigation

Supplementary irrigation will be necessary for the first few years to ensure that plants become established. Future water use is anticipated to be approximately 30 percent or less of the water usage for a typical park of this size.

Stormwater

Concerns about urban street stormwater runoff prompted the inclusion of a stormwater management system as an integral part of this project. Five sets of stacked drywells buried beneath the park each hold up to 50 gallons of water each, which then percolates into the soil before infiltrating into the groundwater system.

Maintenance Program

Small is beautiful when it comes to maintenance, and this park is designed to go easy on both the gardener and his pocket. *No chemical fertilizers, herbicides, or pesticides* will be used to keep the park beautiful. Following the information in this Maintenance Manual will assist the volunteer gardeners in their efforts.

The Arroyos & Foothills Conservancy and Altadena Watershed Committee will mobilize volunteers to conduct maintenance.

Conservation Education

Native oaks, chaparral plants, and wildflowers transform a site that previously provided no sustenance or resting place for wildlife into habitat for birds and insects. Signage, information on the web site, and brochures distributed through the Altadena community will tell the park's story, including strategies used to reduce water usage, and information on its plants and birds. The park can serve as a demonstration garden to school children, garden clubs, scouts, and other interested youth and adult groups on how to develop a water-wise oak grove from scratch.

Arroyos & Foothills Conservancy is a partner with Pasadena Unified School District on watershed education through its short film, "Eaton's Water," which uses the history of local pioneers and early water delivery systems to create place-specific environmental education. The story of Benjamin and Alice Eaton is told in a professionally-made film that has been used since the 2006 academic year.

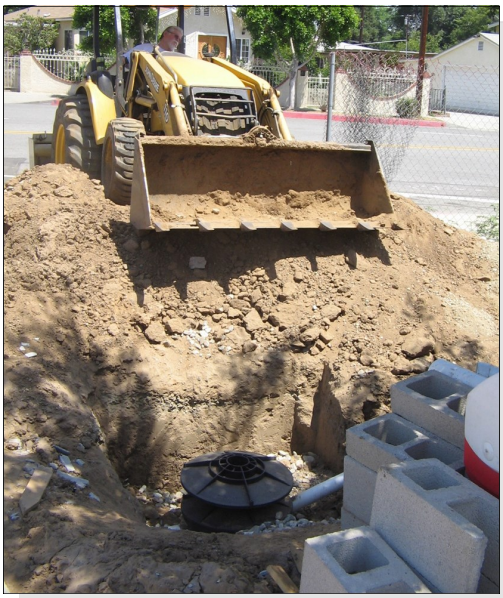

Installing the Flo-Wells

2. SOILS, PLANTING, FERTILIZATION, and MULCH*

Soils provide the anchoring mechanism as well as the water and nutrient exchange medium for plants. In general, soils analysis should precede and inform plant selection. Plants that are adapted to the existing soil conditions, as determined by the soils analysis, are far more likely to thrive, resulting in a sustainable and successful landscape.

Soils Testing

- Testing of planting soils and composted materials should be completed by an independent agronomic soils testing laboratory (member of the California Association of Agricultural Labs). Follow instructions for sample selection to ensure valid results or allow the soils testing lab to come and collect the samples. Keep in mind that the lab soil scientist will prepare a written report and will include recommendations for applications and plant fertilization ***for agricultural applications***. These recommendations are often not appropriate for residential native plant landscaping. Soils testing for this site is completed and included in Appendix A.
- Soil for this site was tested before the project began. The soil was then modified when the project area was completely excavated to a depth of at least 10 feet to install the stormwater units (Appendix C). In the process the soils were mixed with those from deeper layers; initial soils results were no longer pertinent. In fact, it is likely that the excessive salinity and fertility of the surface soil was somewhat corrected by the mixing process.
- Further changes to the soil occurred when new soil donated by Mountain View Cemetery was spread on the mixed native soil. No soils tests were conducted on these new soils.
- Other considerations: Although the soil test results do not apply to the site at the time of planting due to the above mentioned changes, it is believed that the native soil is adequate and amendments are unnecessary. Nitrogen or other amendments, including manure, should not be added, as they will damage (and possibly kill) native plants.
- Soil testing for future park installations should occur at the start of the project to determine whether major soil remediation is required. A second soils test may be necessary if new soil is added to the site or the subsoil is mixed with the planting soil during contouring or construction.

Planting

- Planting procedure (planting details are shown in Appendix B):
    1. Dig a hole as deep as the soil area of the replacement plant and wider.
    2. Fill the hole completely with water at least once.
    3. If necessary, place the gopher cage in the hole according to the instructions (with a 2” edge sticking up at the soil surface).
    4. Remove the plant from the pot and gently spread the roots.
    5. Place the plant in the hole with the plant soil surface level with the ground surface. Do not place too low (there could be root crown damage from water) or too high (the root crown can dry out).
    6. Press soil down to remove air pockets and water thoroughly.
    7. Add mulch 3” – 4” thick around the plant but keep mulch at least 4” away from the root crown (base of the plant at the soil surface) or the plant could rot.
- Replace dead or declining plants as needed. Some plants from the initial installation will die; this is normal, especially in sites that have been disturbed or left untended for a long period.

* Information is summarized from the Care & Maintenance of Southern California Native Plant Gardens

- Determine the cause of plant failure if possible, and correct problems before replanting.
  - **Irrigation:** If the plants are getting too much or too little water, adjust the irrigation regime.
  - **Pests:** If rodent damage is apparent, consider installing underground gopher cages along with the new plants. For insect damage consider bio-control measures, such as releasing ladybugs. Mechanical removal of diseased leaves and stems is an effective pest control measure. All infected plant material should be disposed of and not used as composted material. Chemical controls should only be used if absolutely necessary (see Chapter 5, Chemical weed control). A permit from the County is required for the application of herbicides or pesticides; the chemicals should be applied only by a licensed applicator.
  - **Significant losses:** If a large number of plants fail, it is essential to determine the cause. A new soils test might be necessary to ascertain whether soil modification during installation is at fault.
  - Dispose of diseased or dead plants to prevent the introduction of pathogens into compost or mulch.
- **Replant during fall and winter:** November through January is best. Planting at this time gives the roots of new plants time to grow and adjust to their new setting before the harsh summer heat sets in. The longer the time in the cool winter soil, the greater the probability of success. Planting details are shown in Appendix B.

Fertilization

- No fertilizer is required for these native plantings. The use of organic mulch on this oak woodland landscape will slowly provide additional nutrients to the soil. Adding too much fertilizer encourages stem growth and increased leaf size that then has to be supported during the summer heat.
- If problems arise in the future, the decision to use fertilizers should be based on the recommendations of a horticulturist, biologist, or native plant specialist after a new soils test has been completed.
- If fertilizer is indicated:
  - Apply supplemental fertilizer at the reduced rate of ¼ to 1/3 of the typical dose in the rare instances that it is indicated.
  - Do not apply fertilizers during the heat of summer.
  - Do ***not*** use planting tablets with native plants.

Mycorrhizae

- Mycorrhizae are beneficial soil fungi that bond with plant roots to form a healthy relationship. The fungi get food from the plant roots and plants are better able to absorb nutrients that are broken down by the fungi. California native plants may be able to tolerate adverse conditions such as water stress and low-nutrient soils by exploiting this relationship with mycorrhizae. If you see white threads in the soil, celebrate! This is a good thing.
- Mycorrhizae inoculants may be beneficial when it is evident that soil organisms are absent from the soil, for example, areas where no plants are growing. Areas with little or no vegetation should have the soil tested for the presence of herbicides or general ste-

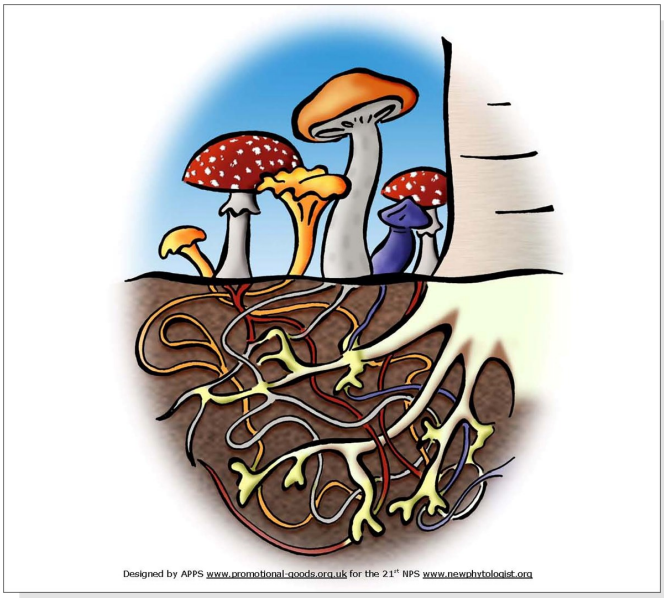

www.newphytologist.org

rility prior to planting native vegetation. There is no need to apply mycorrhizae in areas where native plants are growing.

Mulch

- Mulch provides numerous benefits to landscapes. It moderates soil temperatures, slows water evaporation, suppresses weed growth, and provides a neat and cared for appearance.
- A few things to consider when using mulch:
  - Keep mulch away from the root crown (base) of the plant.
  - Check to ensure that irrigation water penetrates the 3" – 4" mulch layer otherwise only the mulch will be watered and plants will dehydrate from lack of water.
  - Organic mulch – woodchips, shredded bark, etc. - is most appropriate for native woodland gardens. Decomposition of the organic material will slightly enrich the soil over time. Organic mulch needs to be replenished frequently.
  - Inorganic mulch – gravel, decomposed granite, etc. – is excellent for most native plant gardens, especially those with plants adapted to dry conditions found in coastal sage scrub, chaparral, and desert areas. Inorganic mulch rarely needs to be replenished and does not result in excessive nitrogen levels over time.
- Additional information on mulch can be found in Chapter 5: Physical Weed Control.

Mulch

References

Los Angeles Co. Department of Public Works. 2004. *Los Angeles River Master Plan, Landscaping Guidelines and Plant Palettes*. Los Angeles Department of Public Works.

Los Angeles Co. Department of Public Works. In preparation. *Los Angeles River landscape Maintenance Manual*. Los Angeles Department of Public Works.

O'Brien, Bart C. 2001. *California Native Plant Gardens Care and Maintenance*. Rancho Santa Ana Botanic Garden, Claremont, California.

O'Brien, Bart, Betsey Landis, and Ellen Mackey. 2006. *Care and Maintenance of Southern California Native Plant Gardens. Cuidado y mantenimiento de jardins de plantas natives del sur de California*. Pages/paginas: viii, 238. Metropolitan Water District of Southern California, Los Angeles, California.

Salyards, James R., Richard Y. Evans, and Alison M. Berry. 2003. *Mycorrhizal Development and Plant Growth in Inoculated and Non-Inoculated Plots of California Native Grasses and Shrubs* in Native Plant Network. http://www.nativeplantnetwork.org/Content/Articles/4-2NPJ143-149.pdf. Accessed November 2009.

3. WATERING, IRRIGATION, and STORMWATER

Watering

- Most Southern California native plants evolved in a climate with hot, dry summers and cool, wet winters. The plants in this park need winter water, usually provided by natural rains, with little supplemental water following the establishment period.

> The **establishment period** of plants is one to three years when plants have tripled in size

- Climate change may impact care and irrigation of native plants. Scientific research indicates that the climate of Southern California may become hotter and drier in the future. During winters with little or no precipitation native plants may require supplemental water. Once plants are established it is best to minimize summer irrigation since it encourages the growth of pathogenic (disease-causing) fungi and bacteria that can invade roots, sap plant strength, and ultimately lead to death.

Irrigation

A functioning and efficient irrigation system is crucial to the overall success of a landscape project. The as-built park irrigation system is shown in Figure 2; details are shown in Appendix B.

(Excerpted from *Los Angeles River Landscape Maintenance Manual*. Los Angeles Department of Public Works)

Permanent Irrigation Systems

- Check irrigation system on a weekly basis during the establishment period and other times of frequent use. When the system is used less often, monthly inspections may be sufficient. Each station should be turned on from the automatic irrigation controller manually or by using a test program incorporated into the controller's standard features. A test program will run each station on the controller for two minutes or some other defined amount of time. If the controller does not have a test cycle, but does have multiple start times, it is possible to create a two-minute test cycle on one of the programs. See manufacturer's specifications for controller programming.
- Run all stations in sequence from the controller rather than turning them on manually by opening the valves. This will ensure that the controller is functioning properly. While the stations are running, sprays and rotors should be checked to ensure that they are properly aimed without over spraying onto pathways or roadways. Each spray head or rotor should be spraying, without interruption, the distance to the next spray head or rotor as designed by the manufacturer.
- Monitor irrigation equipment on a continuing basis to ensure that the system operates effectively and efficiently. Check the following components regularly:
  - **Drip emitters** to ensure that the tubing has not become loosened, clogged or missing.
  - **The location of drip emitters** to be certain they are providing water to the intended plants. Move emitters away from the base of the plants as plants grow and root systems extend further into the soil.
  - **Filters** for drip irrigation systems at least every two months.
  - **Irrigation controllers** monthly to ensure that the irrigation program is current and functioning properly.
  - **Air relief valves, polyethylene tubing, and flush valves** on a monthly basis to ensure that they are not clogged and are functioning correctly. See Appendix B for details regarding the proper installation and maintenance of irrigation components.
- Check the irrigation system on a weekly basis

during periods of frequent use, such as hot, summer months during the establishment period, to reduce the occurrence of plant failure or water waste from broken equipment.

- Do not turn the system off during the months that irrigation is not needed. Leaving the system shut down for extended periods of time can cause the rubber components in the valves to dry and crack, causing leaks and failures when the system is re-energized.
  - **Program each controller** to irrigate each station a minimum of once per week for at least one minute.
  - **Check the equipment** regularly -and not less than monthly -to reduce water waste from broken equipment during the times when the equipment is running in a maintenance mode.
  - **Run and check the system weekly** in areas where vandalism is likely to occur. These inspections eliminate the need for weekly one-minute cycle runs noted above.
- When a project is installed it is important for the entity constructing the project to work closely with those who will be maintaining the project. Pertinent information regarding the type of irrigation equipment, operation and maintenance of equipment, and applicable warranties should be conveyed to the appropriate, responsible parties.

Temporary Irrigation Systems

- Sites that are designed to restore an area to a native, or close to native state, may be irrigated by temporary irrigation systems. These systems typically are placed on the ground rather than buried, and usually utilize rotors to cover larger areas. Vandalism is a great concern due to the exposed nature of the system.
- During the life of the system (usually three to five years), it is important to check for clogged heads and emitters, missing irrigation spray heads, rotors, or emitters, and to check for animal and insect damage, and irrigation system leaks. Temporary systems should be checked at a minimum, the day that they are scheduled to irrigate. The system should be operated and checked on a monthly basis during the seasons that they are not needed, rather than weekly.
- The temporary irrigation system may be terminated and removed when the County or governing agency determines that the system is no longer needed. Prior to removal of the irrigation system, the irrigation cycle should be slowly adjusted so the plant materials are able to adjust to the lack of supplemental irrigation. This adjustment in the irrigation scheduling may be a process that occurs over several months. The duration of the adjustment period shall be determined by site conditions, plant material needs, and the time of year.

Backflow Preventers

Eventually, the irrigation system will be shut off. Til then:

- Licensed professionals must certify the proper operation of backflow preventers on an annual basis. (see Maintenance Checklist)
- Monitor the backflow device for leaks or other obvious problems during regularly scheduled irrigation maintenance visits. Any problems must be reported to the Conservancy immediately for repair.

Irrigation Scheduling

- Following establishment period
  - usually in one to three years, when the plant is two to three times its original size – plants should be sustainable without supplemental irrigation.
- Irrigation schedules
  - frequency, length of watering period, and time of day
  - should be managed to apply the appropriate amount of water to the plants in order to maintain their optimal health without runoff or water waste. The drought-tolerant and native plants

within the park require much less water once established than a typical urban, ornamental landscape. Unless higher water usage plants are being installed, watering should be kept to a minimum.

- allowing the landscape to adapt to the local climate.

- Schedules should change to reflect three seasons: winter (approximately between November and February), spring (between March and May), and the heat of summer and fall (June through October).
  - **During the winter months**, after the beginning of seasonal rains, irrigation can be reduced to every few weeks or even less with continued monitoring. *Irrigate even mature native gardens during dry winters*.
  - **In the spring**, after the seasonal rains end, and prior to the full heat of summer, irrigation systems may be scheduled more often, as needed. It may be necessary to irrigate more than once per week or as little as once a month depending of the site conditions and the plant materials.
  - **In the summer and fall,** once daytime temperatures are consistently in the 80 to 90 degree range and seasonal rains have ended, monitor conditions and adjust watering based on the needs of the landscape. Water plants thoroughly during the cool time of day, and prior to predicted heat waves or Santa Ana wind conditions, if needed.
  - **Prepare irrigation schedules** in consultation with irrigation professionals and horticulturists knowledgeable in the watering needs of the types of plant materials on site. Place copies of the schedules in the irrigation controller box for each site.
  - **Water trees and plants carefully.** Trees that are anticipated to be self-sustaining with little need for supplemental irrigation may require irrigation during excessive heat for three years or longer. Water thoroughly and infrequently.
  - **Irrigate newly planted landscapes carefully** during the time of establishment, usually one to three years, before the plant has reached two to three times its original size. Even drought tolerant, native plantings may need daily watering for the first week or more after their initial planting. Irrigation should be monitored and adjusted as needed to ensure that the root ball of the new plants and the surrounding soil do not dry out. Newly planted trees will need to be watered deeply on a regular basis until fully established, but not necessarily on a daily basis. It should be a goal that plantings, once established, be as self-sustainable as possible, with little or no supplemental irrigation.

Soil Moisture Monitoring

- Monitor soil moisture using soil probes to determine irrigation needs of the plants. Two tools are useful to monitor soil moisture: an open-faced soil probe or a tile probe, and a hollow core soil probe (see pictures).
- Insert a tile probe into the soil until it meets resistance. Moisture allows the probe to slip through the soil. When the probe meets dry soil it will stop or become difficult to insert deeper. Remove the probe from the soil and measure the depth of penetration to determine depth of soil moisture.
- Insert a soil probe with a hollow core into the

Planting type versus depth of soil moisture

Plant type	Needs irrigation	Optimum depth of moisture	Overwatered
Groundcover	0 - 4"	5" - 12"	Over 12"
Shrub areas	0 - 4"	5" - 12"	Over 24"
Trees	0 - 12"	12" - 24"	Over 36"

ground, twist it 180 degrees to capture a sample and then remove it from the soil. A column of soil is left in the probe, which can be viewed to show the moisture depth. Damped soil will appear at the top of the sample and be darker in color.

Soil probe and use demonstration

- The depth of moisture that a plant needs is determined by the depth of the plant's root system, type of plant, ability to tolerate drought conditions, and other factors. Generally, the majority of tree roots that provide water intake are within the top 24" of the soil. Common sense should always guide when irrigating plants. If the plants are showing signs of drought stress and the soil is dry, they should be irrigated. Indicators of drought stress include but are not limited to: wilting of leaves during the day followed by recovery in the morning, closing of the leaf pores, and shedding of leaves. Wilting and losing leaves at unusual times can also be indicators of overwatering or severe soil compaction; therefore, visual inspection of the plants in combination with soil probing can give a more complete picture of watering needs.

Stormwater

Rainwater retention and infiltration is a significant component of this project. Project proponents considered a number of alternative strategies and used the Flo-well sump system to detain and infiltrate stormwater that flows across the site.

The Flo-Well is a lightweight dry well system that is used to collect and discharge unwanted water back into the subsoil. The modular design creates greater flexibility, and the Flo-Well can be either stacked or connected for increased capacity (http://www.masternurseries.com/drainage.html#Flo-Well).

The stormwater swales were graded to efficiently conduct surface flow to the sumps. Although no regular maintenance is required for these sumps, their locations and Surface Drain inlet covers were mapped for routine checking as the sump units will fill in with sediment over time (Figure 3). Locations for the Surface Drain inlet *covers* are also mapped on (Foldout 2). These locations are covered with pea gravel that should be kept clear of leaves and mulch. Specific working details for the Flo-well are included in Appendix C.

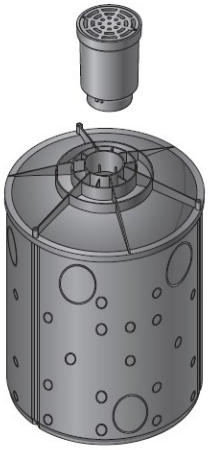

Underground stormwater sump

References

Los Angeles Co. Department of Public Works. 2004. *Los Angeles River Master Plan, Landscaping Guidelines and Plant Palettes.* Los Angeles Department of Public Works.

Los Angeles Co. Department of Public Works. In preparation. *Los Angeles River Landscape Maintenance Manual.* Los Angeles Department of Public Works.

O'Brien, Bart, Betsey Landis, and Ellen Mackey. 2006. *Care & Maintenance of Southern California Native Plant Gardens. Cuidado y mantenimiento de jardines de plantas natives del sur de California.* Pages/paginas: viii, 238. Metropolitan Water District of Southern California, Los Angeles, California.

TreePeople. 2007. *Rainwater as a Resource: A Report on Three Sites Demonstrating Sustainable Stormwater Management.* Los Angeles, California.

Page deliberately blank

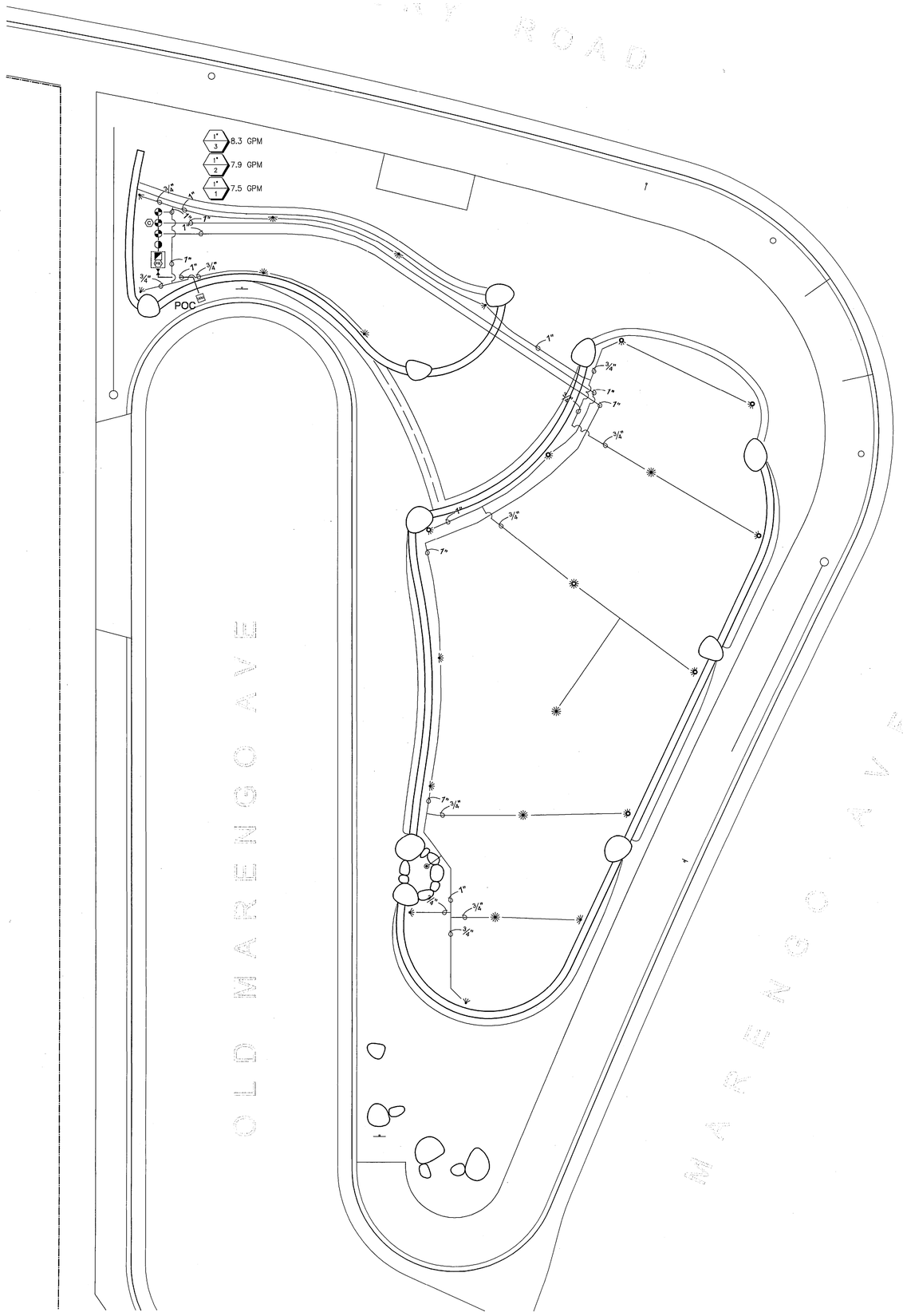

IRRIGATION LEGEND

ITEM	NOZZLE	SYMBOL	DETAIL	NOTES OR MFG. NO.
VALVE			B	RAINBIRD 100-GB
GATE VALVE			E	BRASS, 1"
VALVE SIZE, STATION NUMBER, GPM		SIZE VALVE GPM		
HOSE VALVE QUICK COUPLER			C	RAINBIRD 33DLRC
REDUCED PRESSURE BACKFLOW DEVICE			A	FEBCO 825Y 1"
PRESSURE REGULATOR		PR	A	WILKINS BR4 1"
BACKFLOW CAGE			A	BPDI GS1G
WATER METER		WM		
CONTROLLER, FIELD TRANSMITTER		C	B	RAINBIRD TBOS4CMUS, TBOSFTUS
POINT OF CONNECTION		POC		SEE TABLE BELOW
PRESSURE MAINLINE			F	SCH 40 PVC 1"
NON-PRESSURE LATERAL			F	SCH 40 PVC, SIZED ON PLAN
RAINBIRD 1812 POP-UP-SAM-R13-18	Q,T,H,F		E	USE BOTTOM INLET ONLY
RAINBIRD 1812 POP-UP-SAM-R17-24	Q,T,H,F		E	USE BOTTOM INLET ONLY
RAINBIRD 1401 BUBBLER				ON FLEX TUBE
SEE IRRIGATION DETAILS SHEET 4.1				

POINT OF CONNECTION

METER SIZE	1"	
MAX. FLOW	UNKNOWN, METER NOT YET INSTALLED	
STATIC PRESSURE	38 PSI	FROM PASADENA WATER & POWER
SYSTEM DESIGN PRESSURE	25 PSI	
SYSTEM DESIGN MAX FLOW	8.3 GPM @ DESIGN PRESSURE	
DATE OF INFORMATION	03/25/2006	
THIS IS A POTABLE SYSTEM		

IRRIGATION NOTES

1. THIS DESIGN IS DIAGRAMMATIC. ALL PIPING, VALVES, ETC. SHOWN WITHIN PAVED AREAS ARE FOR DESIGN CLARIFICATION ONLY AND SHALL BE INSTALLED IN PLANTING AREAS WHEREVER POSSIBLE.
2. SET ALL VALVES AND QUICK COUPLERS IN PLANTERS.
3. PIPE SIZES SHALL CONFORM TO THOSE SHOWN ON THE DRAWINGS. NO SUBSTITUTIONS OF SMALLER PIPE SIZES SHALL BE PERMITTED, BUT SUBSTITUTIONS OF LARGER SIZES MAY BE APPROVED. ALL DAMAGED AND REJECTED PIPE SHALL BE REMOVED FROM THE SITE AT THE TIME OF THE SAID REJECTION.
4. USE OF 4-WAY OR CROSS FITTINGS IS NOT ALLOWED.
5. FINAL LOCATION OF THE AUTOMATIC CONTROLLER SHALL BE APPROVED BY THE LANDSCAPE DESIGNER AND PROJECT MANAGER.
6. BEFORE COMMENCING ANY EXCAVATION, THE CONTRACTOR SHALL OBTAIN AN UNDERGROUND SERVICE ALERT I.D. NUMBER BY CALLING 1-800-422-4133. THREE (3) WORKING DAYS SHALL BE ALLOWED AFTER THE I.D.NUMBER IS OBTAINED AND BEFORE THE EXCAVATION WORK IS STARTED SO THAT UTILITY OWNERS CAN BE NOTIFIED.
7. THE CONTRACTOR SHALL FLUSH AND ADJUST ALL VALVES, LATERALS AND EMITTERS FOR OPTIMUM COVERAGE.
8. IT IS THE RESPONSIBILITY OF THE IRRIGATION CONTRACTOR TO FAMILIARIZE HIMSELF WITH THE GRADE DIFFERENCES, LOCATION OF WALLS, AND UTILITIES. THE IRRIGATION CONTRACTOR SHALL REPAIR OR REPLACE ALL ITEMS DAMAGED BY HIS WORK. HE SHALL COORDINATE HIS WORK WITH OTHER CONTRACTORS FOR THE LOCATION AND INSTALLATION OF PIPE SLEEVES AND LATERALS UNDER WALLS AND PAVING, ETC.
9. THE SPRINKLER SYSTEM DESIGN IS BASED ON A MINIMUM OPERATING PRESSURE OF 25 P.S.I. AND A MAXIMUM FLOW DEMAND OF 9.0 G.P.M. THE CONTRACTOR SHALL VERIFY WATER PRESSURES PRIOR TO CONSTRUCTION. REPORT ANY DIFFERENCE BETWEEN WATER PRESSURE INDICATED ON THE DRAWINGS AND THE ACTUAL PRESSURE READING AT THE IRRIGATION POINT OF CONNECTION TO THE LANDSCAPE DESIGNER.
10. IF THE WATER PRESSURE DOES NOT EXCEED 60 PSI, THE PRESSURE REGULATOR IS NOT REQUIRED.
11. DO NOT WILLFULLY INSTALL THE SPRINKLER SYSTEM AS SHOWN ON THE DRAWINGS WHEN IT IS OBVIOUS IN THE FIELD THAT THERE ARE UNKNOWN OBSTRUCTIONS OR GRADE DIFFERENCES IN THE AREA. DIMENSIONS EXIST THAT MIGHT NOT HAVE BEEN CONSIDERED IN THE DESIGN. SUCH OBSTRUCTIONS OR DIFFERENCES SHOULD BE BROUGHT TO THE ATTENTION OF THE LANDSCAPE DESIGNER. IN THE EVENT THAT THIS NOTIFICATION IS NOT GIVEN, THE CONTRACTOR SHALL ASSUME FULL RESPONSIBILITY FOR ANY NECESSARY REVISIONS.
12. ALL IRRIGATION EQUIPMENT NOT OTHERWISE DETAILED OR SPECIFIED SHALL BE INSTALLED AS PER MANUFACTURER'S RECOMMENDATIONS AND SPECIFICATIONS.
13. THE INTENT OF THE DESIGN IS TO PROVIDE 100% COVERAGE TO ALL PLANTING AREAS.
14. INSTALLATION FOR THE CONTROL WIRES SHALL FOLLOW MAINLINE ROUTING.
15. LOCATE "AS-BUILT" VALVE CHART IN CONTROLLER - REDUCE AND ENCASE IN PLASTIC.
16. THE CONTRACTOR SHALL GUARANTEE THE INSTALLED SPRINKLER SYSTEM FOR A PERIOD OF ONE (1) YEAR FROM THE DATE OF ACCEPTANCE OF THE WORK. SHOULD ANY TROUBLE DEVELOP WITHIN THE TIME SPECIFIED DUE TO INFERIOR OR FAULTY MATERIAL OR WORKMANSHIP, THE TROUBLE SHALL BE CORRECTED BY THE CONTRACTOR WITHOUT EXPENSE TO THE OWNER.
17. REFER TO GENERAL NOTES FOR ADDITIONAL INFORMATION REGARDING THIS SECTION OF WORK.
18. WHEN INSTALLATION OF THE IRRIGATION SYSTEM IS COMPLETED, PERFORM A COVERAGE TEST IN THE PRESENCE OF OWNER'S REPRESENTATIVE AND LANDSCAPE DESIGNER TO DETERMINE THAT COVERAGE FOR PLANTING AREAS IS COMPLETE AND ADEQUATE. WHERE INADEQUATE COVERAGE OCCURS DUE TO DEVIATIONS FROM PLANS, OR SITE CONDITIONS DIFFER AND THE SYSTEM HAS BEEN INSTALLED WITHOUT NOTIFYING THE LANDSCAPE DESIGNER, THE IRRIGATION CONTRACTOR SHALL PROVIDE NECESSARY MATERIAL AND PERFORM WORK TO CORRECT ALL INADEQUACIES WITHOUT ADDITIONAL COST. THESE TESTS AND CORRECTIONS SHALL BE ACCOMPLISHED BEFORE ANY PLANTING.

NORTH

0 2 4 8
SCALE 1"=8'-0"

DIAL BEFORE YOU DIG
1-800-422-4133
DIGALERT
PLAY IT SAFE. DIAL BEFORE YOU DIG!
AT LEAST TWO WORKING DAYS PRIOR TO EXCAVATING
SERVING NINE SOUTHERN CALIFORNIA COUNTIES

toby macelroy
garden design
2651 highview ave
altadena ca 91001
626.797.6861
tobymacelroydesign.com

DATE: 06.03.06

SHEET TITLE: IRRIGATION PLAN

OWNER: ALTADENA FOOTHILLS CONSERVANCY
P.O. BOX 3
ALTADENA CA 91003.0003
(626)296-0330

SHEET: 04.0

CARRON – LOCATION OF STORM WATER SUMPS

POD # 1 = 188 lin ft. wall
does not include concrete curbing to N.

POD # 2 = 74 lin. ft. wall
does not include concrete curbing to N.

stormwater sumps
flow well

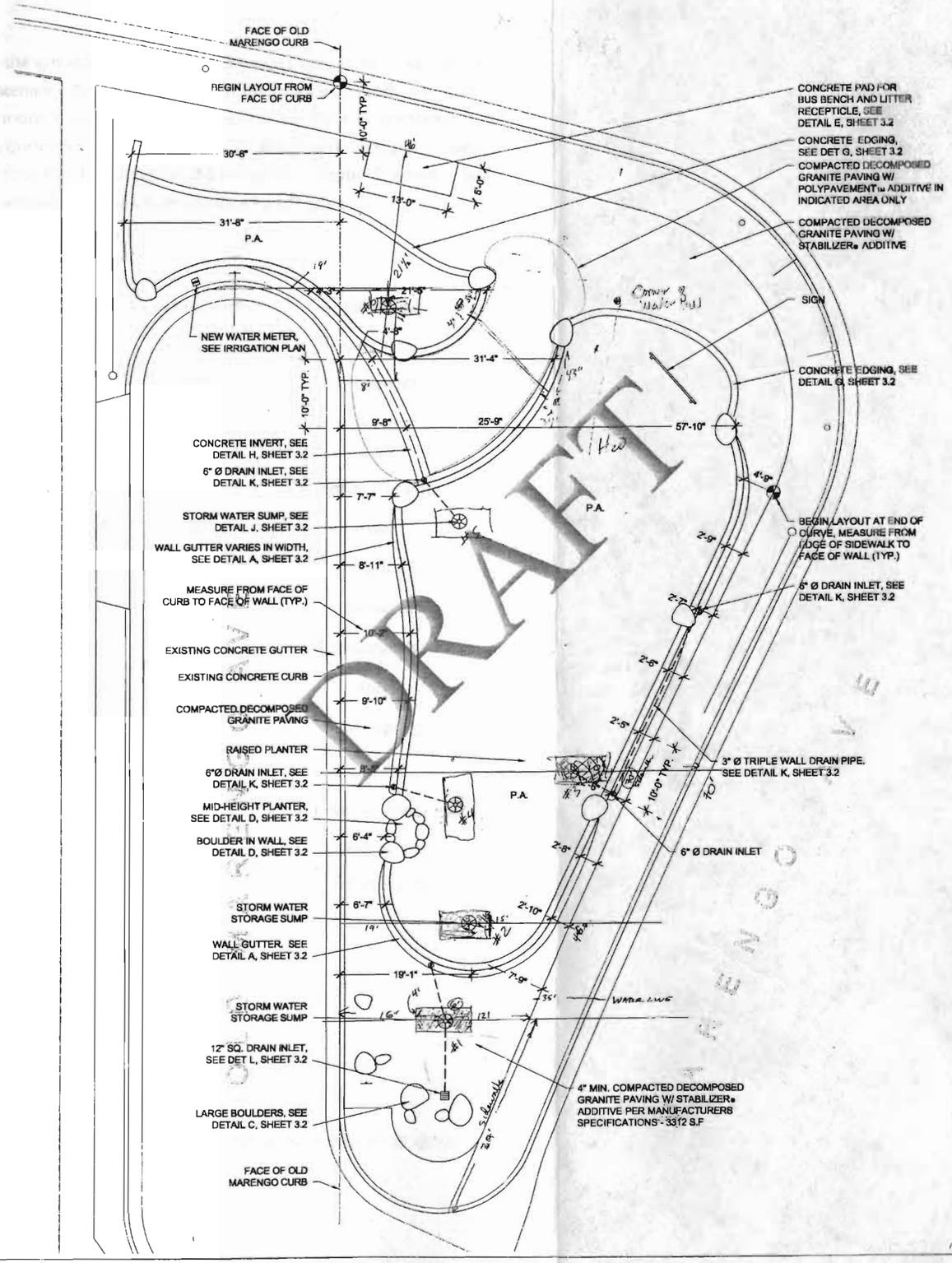

CONSTRUCTION LEGEND	
SYMBOL	DESCRIPTION
	DATUM POINT FOR WALL LAYOUT
	6" ROUND, 12" SQUARE DRAIN INLETS
	STORMWATER SUMP
	4" DRAINLINE

CONSTRUCTION NOTES

1. DRAWING IS DIAGRAMMATIC. CONTRACTOR TO VERIFY ALL CONDITIONS AND LOCATIONS ON SITE PRIOR TO THE START OF CONSTRUCTION. NOTIFY LANDSCAPE DESIGNER IMMEDIATELY IF ANY ERRORS OR DISCREPANCIES ARE FOUND, BEFORE PROCEEDING WITH ANY WORK. DO NOT SCALE DRAWINGS.
2. USE DIMENSIONS AS INDICATED ON PLAN.
3. GRADE DIFFERENCES EXIST THAT MAY NOT HAVE BEEN APPARENT DURING DESIGN. OBTAIN DIRECTION; DO NOT WILLFULLY PROCEED WITH CONSTRUCTION WHEN IT IS OBVIOUS THAT OBSTRUCTIONS AND/OR BEFORE PROCEEDING WITH CONSTRUCTION IN SUCH CASES.
4. THE LOCATION OF ALL SERVICE RUNS, SUCH AS WATER SUPPLY, ELECTRICAL (OVERHEAD AND UNDERGROUND), TELEPHONE, SANITARY SEWER, ETC. SHOULD BE ASCERTAINED BEFORE WORK IS STARTED. WHERE THEY WILL BE AFFECTED BY EXCAVATION OR WHERE MACHINES MAY BE WORKING NEARBY, THEY SHOULD BE CAREFULLY SEALED, PROTECTED, OR DIVERTED. NOTIFY LANDSCAPE DESIGNER OF ANY CONFLICT WITH PROPOSED IMPROVEMENTS.
5. COORDINATE ALL UTILITY RUNS AND INSTALLATIONS (EXISTING AND NEW) PRIOR TO PAVING INSTALLATION. VERIFY ALL SLEEVES AND ELECTRIC SOURCES FOR IRRIGATION CLOCK WITH PROPER SUB-CONTRACTORS.
6. OBTAIN INSPECTION AND APPROVAL OF ALL FORMS PRIOR TO PLACING PAVING FROM LANDSCAPE DESIGNER AND PROJECT MANAGER.
7. TRANSITIONS FROM EXISTING PAVING TO NEW PAVING SHALL BE FLUSH.
8. REFER TO PLANS AND GENERAL NOTES FOR ADDITIONAL INFORMATION REGARDING THE CONSTRUCTION OF THIS PROJECT.
9. CONSTRUCT ALL WALLS, PAVING, DRAIN LINES, SLEEVING, ETC. PER PLAN AND DETAILS.
10. CONCRETE GUTTERS TO SLOPE TO WALLS AND TOWARDS DRAIN INLETS AT A MINIMUM RATE OF 1/8" PER FOOT. INSTALL CONCRETE FORMS WITH LONG, SMOOTH GRADIENTS TO ELIMINATE DIPS, RIDGES, ABRUPT CHANGES OF GRADE, AND SHARP TRANSITIONS.
11. INSTALL EXPANSION JOINTS PER PLAN AND DETAILS. INSTALL CRACK CONTROL JOINTS @ 3'-0" MAX. DISTANCE. SAW CUT JOINTS WILL NOT BE ALLOWED. INSTALL CJ'S AND CCJ'S AT 90° TO THE EDGE OF CONCRETE PAVING. SEE PLAN FOR ADDITIONAL INFORMATION AND LOCATIONS.
12. PRIOR TO PLACING CONCRETE, SUFFICIENTLY MOISTEN THE SUB-GRADE.
13. INSTALL TYPE II CONCRETE THAT OBTAINS A MINIMUM COMPRESSIVE STRENGTH OF 2,500 P.S.I. AT 28 DAYS, UNLESS OTHERWISE SPECIFIED BY THESE PLANS AND DETAILS. CONCRETE TO BE FAWN COLOR WITH A TROWEL FINISH. SUBMIT SAMPLE TO PROJECT MANAGER AND LANDSCAPE DESIGNER PRIOR TO LAYING OUT FORMS.
14. DECOMPOSED GRANITE SHALL BE INSTALLED PER PLAN. FOR SLOPED PATH AND AREA ADJACENT TO THE V-INVERT AS INDICATED ON LAYOUT PLAN, INSTALL AND COMPACT DECOMPOSED GRANITE PAVING WITH POLYPAVEMENT™ ADDITIVE PER MANUFACTURER SPECIFICATIONS. POLYPAVEMENT CO., WWW.POLYPAVEMENT.COM. FOR ALL OTHER AREAS, INSTALL AND COMPACT DECOMPOSED GRANITE PAVING W/ STABILIZER® ADDITIVE PER MANUFACTURER SPECIFICATIONS. STABILIZER SOLUTIONS, INC., WWW.STABILIZERSOLUTIONS.COM
15. BACKFILL AND COMPACT BEHIND ALL WALLS AND MASONRY STRUCTURES AS REQUIRED ON DRAWINGS AND DETAILS. BACKFILL PLANTERS WITH TOP GRADE SANDY-LOAM TOPSOIL PER PLANTING NOTES.
16. CLEAN UP AND REMOVE ALL DEBRIS FROM SITE PRIOR TO REQUESTING FINAL APPROVAL FROM LANDSCAPE DESIGNER AND PROJECT MANAGER. GRADE ALL AREAS WITHIN .5 INCH OF FINISH GRADES. NOTE AREAS OF ADDITIONAL GRADING SHOWN.

NOTE: REFER TO GENERAL NOTES

NORTH

0 2 4 8
SCALE 1"=8'-0"

DIAL BEFORE YOU DIG
1-800-422-4133
DIGALERT
PLAN AT LEAST TWO WORKING DAYS BEFORE YOU DIG
AT LEAST TWO WORKING DAYS PRIOR TO EXCAVATING
SERVING NINE SOUTHERN CALIFORNIA COUNTIES

toby macelroy
garden design
2651 highview ave
altadena ca 91001
626.797.6861
tobymacelroydesign.com

DATE: 06.03.06

SHEET TITLE: CONSTRUCTION PLAN
CONSTRUCTION NOTES

OWNER: ALTADENA FOOTHILLS CONSERVANCY
P.O. BOX 3
ALTADENA CA 91003.0003
(626)296-0330

SHEET: 03.0

4. PLANT MAINTENANCE

This chapter is meant as a handy pocket guide for on-the-ground maintenance. Following the list of plants, general instructions for maintenance are first divided into maintenance by growth forms and then species-specific information is detailed along with photographs of the plant. For more in-depth information, check the *Care & Maintenance of Southern California Native Plant Gardens* (2006) and *California Native Plants for the Garden* (2005). Though the species list within the park will migrate somewhat, the original Planting Plan is included at the end of this chapter (page 33). For scheduling purposes, a **Maintenance Checklist** with all tasks is included in Appendix D (page 61).

Plant List

Shrub and Perennial List:	Common name	Size	On center*	Flowering
Ceanothus 'Dark Star'	California lilac	5 gal.	42"	early spring
Eriogonum grande rubescens	red buckwheat	1 gal.	36"	June-Oct
Lessingia filaginifolia 'Silver Carpet'	Silver Carpet California aster	1 gal.	24"	summer
Mimulus aurantiacus	red monkeyflower	1 gal.	30"	spring/summer
Muhlenbergia capillaris	pink hairgrass	1 gal.	30"	fall
Penstemon eatonii	Eaton's penstemon	1 gal.	24"	spring
Penstemon spectablis	showy penstemon	1 gal.	30"	spring -fall
Ribes aureum	golden currant	1 gal.	60"	February/March
Salvia 'Bee's Bliss'	creeping sage hybrid	1 gal.	36"	spring
Salvia clevelandii	Cleveland sage	1 gal.	42"	late spring
Salvia mellifera 'Terra Seca'	black sage hybrid	1 gal.	60"	spring
Salvia spathacea	hummingbird sage	1 gal.	30"	l. winter/summer
Trichostema lanatum	wooly blue curls	1 gal.	30"	year round
Zauschneria californica	California fuchsia	1 gal.	36"	summer/fall

* On center—distance between plants. Avoids overcrowded look when plants are fully grown.

General Guidelines:

- Plant or replace any species in the fall when the weather cools.
- Do not use fertilizer on these planting as these species are accustomed to soils with low fertility soils.
- Keep plant shape as natural as possible; prune mostly for plant health or public safety.
- Over time people will add favorite plants to community parks. Maintenance volunteers may need to assess and remove if plants are inappropriate.

Tree Maintenance

Maintained trees grow well and have fewer problems throughout their lifetime. Examine trees for potential problems during each monitoring visit.

Tree Pruning

- Consult a Certified Arborist prior to doing any tree work. All tree work should be completed under the direct supervision of a Certified Arborist.
- Never prune more than 25% of the living mass of a tree in one season.
- Do not prune trees at time of planting.

The following guidelines are based on the International Society of Arboriculture standards.

- Multi-trunk trees should appear as natural as possible.
- Trees should be pruned for safety and tree health reasons such as removing dead branches, removing rubbing branches, or reducing hazard potential.
- Trees should not be "topped" for any reason. Topping consists of cutting large branches to lower tree height, leaving stumps and an unsightly appearance.
- Pruning to remove dead, weak, or diseased branches can be done at any time.
- Pruning for ADA clearance should include removing branches 7' above pedestrian pathways and 10' for pathways used by bicyclists. In addition, plant materials including trees should not protrude within the pathway more than 4".
- For more information regarding pruning, visit the International Society of Arboriculture website: .

Pruning Schedule

- Do not prune trees during the first season after planting unless there are broken or hazardous branches. For the first five years (approximately), inspect young trees during the area's regular maintenance monitoring for broken branches or safety concerns.
- Remove diseased branches and continue monitoring trees carefully for additional signs of stress or disease. If it continues remove and dispose of all diseased plant material in an appropriate manner.
- Remove trees with severe insect infestation that do not respond to treatment. When trees are removed, the stumps should be dug out or ground to 12" below the finish surface. Chippings from stumps should be removed and replaced with clean top soil.
- Prune young trees with the assistance of a certified arborist to develop good structure.
- Only prune trees if there is a compelling reason such as rubbing branches, weak branches, or branches that interfere with pedestrian safety or block safety lighting. After the initial five years of planting, trees need less pruning.
- Trees may be placed on a three year pruning cycle but pruning should be minimal.

Tree Replacement

- Remove diseased or damaged trees as soon as possible.
- Use fifteen-gallon or larger trees to replace older specimens.
- Plant in the fall for most favorable root establishment and outcome.
- Do not prune trees at the time of planting.

Tree Stake Maintenance

- Stakes tied directly to the tree trunk should have removed at the time of planting.
- Stake or guy wire fifteen gallon trees (and larger) that cannot remain upright without support. Follow tree staking instruction shown here and in Appendix B Figure H.
- Tree ties should be made of flexible rubber materials, attached in a figure eight pattern as indicated in the staking details.
- Check tree ties and stakes during each maintenance inspection. Loose or missing stakes and ties should be repaired. Tree ties should be loosened, as needed

during the year to prevent damage to the bark.

- Remove tree ties as soon as tree appears able to support itself. Tree stakes should be removed by the third year after planting unless the tree is not able to support itself.

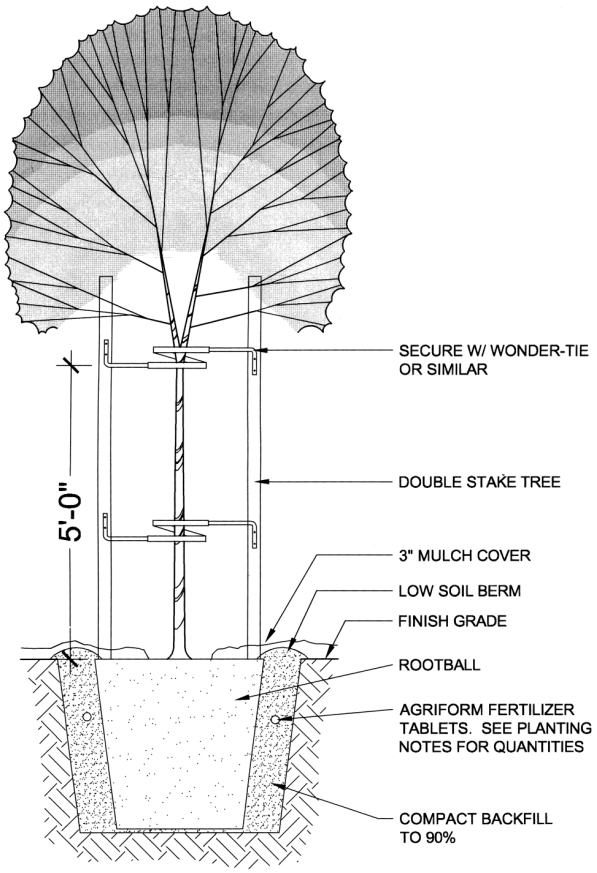

H TREE PLANTING DETAIL

NOT TO SCALE

Redbud tree—flowers and leaves

Redbud tree—flowers before leaves

Redbud tree—fruit

Redbud tree—fruits still on tree

Western redbud

(*Cercis occidentalis*)

Plant Info:

- Deciduous small tree or shrub, often multi-stemmed, approximately 15 feet tall. Heart-shaped leaves that appear in spring while the tree is covered with magenta flowers. Pea pods hang on the trees after the leaves have fallen. Fall color and flowering is best in areas with winter chill.

Exposure:

- Full sun to part shade.

Soil:

- Prefers well-drained soil but is adaptable.

Water:

- Will accept some water, though it is fairly drought tolerant.

Pruning and Care:

- Prune while flowering, as leaves are emerging.
- For multi-stemmed specimens, remove older, thicker stems.
- Rejuvenate older, unpruned, multi-stem specimens by cutting the whole clump to the ground in late fall or winter.
- Remove suckers from single stemmed specimens (standards). Suckers can be cut at any time of the year.
- Other than pruning to maintain vigor, little special care is required.

Habitat Value:

- Hummingbirds feed on nectar. Attracts pollinators.

Western Sycamore
(*Platanus racemosa*)

Sycamore—bark and fruits

Plant Info:
- Fast growing, deciduous tree, 40 to 80 feet tall with interesting branching structure and mottled, light-colored bark.

Exposure:
- Full sun

Soil:
- Adaptable

Water:
- Occasional to moderate water.

Pruning and Care:
- Consult a certified arborist prior to pruning any trees.
- Prune during winter when leaves are absent.
- Prune young trees to establish a good branching structure.
- Mature sycamores should be pruned as little as possible to avoid heartwood rot.
- Remove dead branches for general safety and the health of the tree.
- In the spring sycamore blight, anthracnose, attacks and kills newly emerging shoots and leaves. When the weather becomes warmer and drier the fungus subsides. In bad years (with a long wet spring) the trees may defoliate and re-leaf several times. Anthracnose is often responsible for the unique and interesting branching structure of this sycamore.
- Older trees can get infested with mistletoe. Small branches with mistletoe should be removed. For larger branches, cut back the mistletoe to the bark and treat with an appropriate herbicide. Consult an arborist for serious cases.
- Remove sycamore seedlings that you do not want to grow into large specimen trees.

Habitat Value:
- Provides nesting habitat and food for many birds. It is a larval food plant for the western tiger swallowtail butterfly.

Sycamore—mature tree

Coast live oak—young tree

Coast live oak—acorns

Coast live oak—male flowers, catkins

Coast live oak
(*Quercus agrifolia*)

Plant Info:

- Broad-leaf evergreen tree, 30 to 75 feet tall with broad canopy. Shiny cup-shaped leaves drop throughout the year but may drop more heavily periodically.

Exposure:

- Full sun

Soil:

- Well-drained soil is best, but is adaptable. ***Do not fertilize or amend soil near oaks!***

Water:

- Water oaks during the winter in drought years; oaks need winter water not summer water.
- Wean trees from summer irrigation following establishment. Minimize summer water to reduce the risk of root rot.

Pruning and Care:

- Consult a certified arborist prior to pruning oaks.
- Prune from mid-July to September. Winter and spring pruning causes abundant new growth at or near the pruning site which is often affected by powdery mildew. This stresses the oak and can take months to recover.
- Prune young oaks to establish a good branching structure.
- Mature oaks do not need or benefit from removal of much live growth. Only prune mature oaks for safety, to remove dead wood, or correct crossed branches or tight crotches.
- Every few years remove dead branches for general safety and the health of the tree.
- Allow oak leaf litter to accumulate as natural mulch to help control weeds, reduce water loss, reduce soil compaction, and improve soil composition.
- Do not plant under the tree canopy or within 6 feet of the oak base.
- Do not water during hot, dry season as this encourages root rot.

Habitat Value:

- Oak trees provides excellent habitat for birds, insects, and mammals. Dead branches provide nesting opportunities for birds. Acorns are food.

Engelmann oak
(*Quercus engelmannii*)

Plant Info:
- Semi-evergreen, extremely broad oak, grows form 20 to 50 feet tall. Dusty blue-green leaves that are deciduous (drop all at once) on some specimens, but not all. Leaves turn yellow and drop in spring before new leaves emerge.

Exposure:
- Full sun.

Soil:
- Adaptable to most soils. Do not fertilize or amend soil near oaks!

Water:
- Little summer water once established. Supplemental water during dry winters may keep the tree from dropping its leaves early.
- Do not water in spring when leaves are dropping.

Pruning and Care:
- Consult a certified arborist prior to pruning oaks.
- Prune from mid July to September. Winter and spring pruning causes abundant new growth at or near the pruning site which is often affected by powdery mildew. This stresses the oak and can take months to recover.
- Prune young oaks to establish a good branching structure.
- Mature oaks do not need or benefit from removal of much live growth. Only prune mature oaks for safety, to remove dead wood, or correct crossed branches or tight crotches.
- Allow oak leaf litter to accumulate as natural mulch to help control weeds, reduce water loss, reduce soil compaction, and improve soil composition.
- Do not plant under the tree's canopy or within 6 feet of the base of the oak.

Habitat Value:
- Oak trees provides excellent habitat for birds, insects, and mammals. Dead branches provide nesting opportunities for birds. Acorns are food.

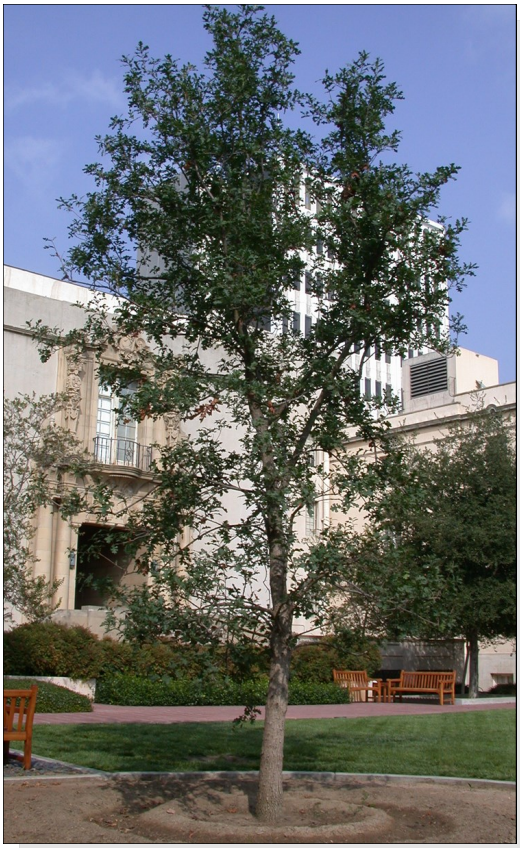

Engelmann oak—young tree

Engelmann oak—mature tree

Engelmann oak—acorn

Maintenance for Shrubs, Groundcovers and Herbaceous Perennials

Pruning

- Allow shrubs to grow in as natural a state as possible with minimal pruning.
- In general, prune branches by cutting them back to the main stem or large branch rather than trimming the branch ends and leaving a stub.
- Remove no more than about one third of the living material of a woody shrub at a time. Herbaceous shrubs, deciduous shrubs, and perennials may be pruned as necessary (more than 30% of the total shrub) to remove dead material and promote new growth.
- Shrubs may be cut back more severely for safety purposes when adjacent to roads, walkways or driveways, or where they obscure visibility.
- Replace shrubs that have grown too large for the area in which they were planted with shrubs of like character that will not grow as large.
- Remove dead plants, broken branches, repair damage, or remove an obstruction that may impose a risk to area users nearby as needed. Otherwise, follow the schedule on the Checklist.
- Dead shrubs should be disposed of and replaced upon removal.

Watering

- Do not allow plants to dry out prior to or after planting. Even native shrubs that use less water need to have an adequate and consistent water supply during establishment.
- Make sure that the soil does not dry out during the first week after planting, especially in hot weather. Frequent watering, from several times per week to every day, may be needed for several weeks based on the plant species and time of year. Regular watering should continue on at least a weekly basis as needed. As the shrubs are becoming established, water deeply but less frequently. Check the plants and soil to determine water needs during this critical time.
- After the shrubs are established (when plant grown 2 to 3 times its original size, over a period of 1 to 3 years), they can be placed on the regular, seasonal watering schedule.

Shrub and Groundcover Replacement

- Replace plant in the fall or winter, after the summer heat wanes, the nights cool and the rainy season begins. This encourages root establishment before summer temperatures rise and plant growth slows.
- Aim for only 10% replacement per year. If more plants are failing, try to determine and correct the problems before replanting.
- Aim to replace the groundcovers if they become unattractive.

Groundcover Management

- Woody groundcovers for the site are *Lessingia filaginifolia* 'Silver Carpet', *Salvia* 'Bee's Bliss', and *Salvia* 'Terra Seca'. *Salvia spathacea* is an herbaceous groundcover.
- Woody groundcovers require little pruning beyond deadheading and occasional light pinching to increase the density around the outside edge of the plant. Pinch more aggressively during first season of growth to encourage a dense form. Prune stems in the center of the plants to prevent mounding.
- If replanting, plant woody groundcovers on center spacing equal to the ultimate spread of the plant.
- Hummingbird sage (*Salvia spathacea*) can be planted 3 feet apart on center. As it fills in, pieces can be removed an used to enlarge the cluster or start another one.

Ceanothus Dark Star flowers

Ceanothus Dark Star shrub

Dark Star Ceanothus

(*Ceanothus* 'Dark Star')

Plant Info:

- Fast growing, evergreen shrub, 6 feet tall, wider. Small dark green leaves, striking cobalt blue flowers in early spring.

Exposure:

- Full sun to part shade.

Soil:

- Excellent drainage. Susceptible to root disease from water molds in wet, heavy soils; short-lived in heavy soil.

Water:

- Never water in hot weather. Little supplemental water once established.

Pruning and Care:

- Lightly prune in spring after flowering. Only prune stems thinner than a pencil as larger cuts heal slowly and are susceptible to apricot dieback fungus. The spores of this fungus spread in the rain.
- Never fertilize, even in lean soil; produces nitrogen-fixing root nodules on.

Habitat Value:

- Supports caterpillars of ceanothus silk moth and other moths/butterflies.

Red buckwheat flowers

Red buckwheat leaves

Red buckwheat

(*Eriogonum grande* var. *rubescens*)

Plant Info:

- Low, fast-growing, evergreen subshrub, 1 to 3 feet tall and wide. Showy pale pink to red flower clusters June - October. Lives less than 5 yrs.

Exposure:

- Sun to part shade.

Soil:

- Well-drained soil.

Water:

- Occasional water once established. Intolerant of summer water.

Pruning and Care:

- Prune spent flowers unless seed for birds, or seedlings are desired.
- Prune to lateral stem if plant becomes leggy.

Habitat Value:

- Important butterfly plant and seed eating birds (finches, juncos, larks, sparrows, towhees, quail, and grouse).

Silver Carpet California aster
(*Lessingia filaginifolia* 'Silver Carpet')

Plant Info:
- Evergreen groundcover with gray-green leaves. Lavender-pink aster flowers in summer. Usually reaches 12 inches in height, 4 – 8 foot spread.

Exposure:
- Full sun to part shade.

Soil:
- Best in well-drained soil, though fairly adaptable.

Water:
- Little or no summer water after first year.

Pruning and Care:
- Remove spent flowers in fall.
- Pinch back to encourage dense growth.

Habitat Value:
- Attracts butterflies and caterpillars.

Silver carpet California aster flower

Silver carpet California aster

Red monkeyflower
(*Mimulus aurantiacus*)

Plant Info:
- Woody, evergreen subshrub, 2 - 3 feet tall and wide. Showy flowers often yellow, orange, or red; can be white, pink or coral. Short-lived, typically 2 to 5 years. Make cuttings for replacements plants.

Exposure:
- Part shade, especially inland.

Soil:
- Well-drained soil is best. Shorter-lived in heavier soils.

Water:
- Little water once established. Occasional summer water will keep plants looking better in summer, though reduce plant's longevity.

Pruning and Care:
- Pinch or tip young plants to promote denser growth.
- Do not prune into old wood; new growth rarely occurs on woody stems.
- Prune back flowering stems after the bloom.
- For a second flowering period, remove all flower stems in May to June, water occasionally to keep plant from going dormant.

Red monkeyflower flowers

Red monkeyflower shrub

Pink hairgrass flowers

- Light pruning. Make cuttings for replacement plants.
- Susceptible to fungal and viral disease, often short-lived. Powdery mildew if watered too much.

Habitat Value:
- Provides food for butterfly larvae.

Pink hairgrass
(*Muhlenbergia capillaris*)

Plant Info:
- Non-native ornamental grass from the eastern U.S. with pink flowers in the late summer/early fall. Grows to 3 feet tall and 2 - 3 feet wide. Best viewed in morning or evening with backlighting.

Exposure:
- Sun; tolerates part shade.

Soil:
- Well-drained soils.

Water:
- Little supplemental water but will bloom more with some summer water.

Pruning and Care:
- Very little care but cut back in May or June followed by watering.

Eaton's penstemon flowers

Eaton's penstemon
(*Penstemon eatonii*)

Plant Info:
- Evergreen perennial with red tubular flowers. Grows 1' –3' tall with many blooms per stem.

Exposure:
- Sun.

Soil:
- Well-drained soils.

Water:
- Very low water needs.

Pruning and Care:
- Cut back hard following flowering.
- If aphids appear, hose off both aphids and sticky honeydew with water or use insecticidal soap.

Habitat Value:
- Hummingbird magnet in spring.

Eaton's penstemon in bloom

Showy penstemon
(*Penstemon spectabilis*)

Plant Info:

- Showy evergreen perennial with pink-lavender-blue tubular flowers that grows wild here; can grow 3’ - 6’ tall with up to 100 blooms per stem.

Exposure:

- Full sun.

Soil:

- Well-drained soils.

Water:

- Very low water needs.

Pruning and Care:

- Cut back hard following flowering.
- If aphids appear, hose off both aphids and sticky honeydew with water or use insecticidal soap.

Habitat Value:

- Hummingbird magnet in spring.

Showy penstemon flowers

Showy penstemon in bloom

Golden currant
(*Ribes aureum*)

Plant Info:

- Broad sprawling deciduous evergreen shrub from 3’ to 8’ tall. Attractive lobed leaves appear in late winter or early spring along with yellow flowers with red highlights. Flowers are followed by attractive yellow-orange or dark berries that are sought after by birds.

Exposure:

- Blooms best in full sun, accepts partial shade.

Soil:

- Adaptable.

Water:

- Low water requirements.

Pruning and Care:

- Will form massive thicket if left unpruned. Can be pruned any time, though best in late summer when berries are gone and plant is going dormant. If necessary, consider using root barriers to contain its ranging spread.
- Often gets rust in summer and drops its leaves in response. Rust does

Golden currant flowers and fruit

Golden currant shrub

Creeping sage flowers

Creeping sage mat

Cleveland sage flowers

Cleveland sage shrub

not usually shorten the life of this hardy shrub.

Habitat Value:

- Berries are valuable food for birds. Yellow flowers attract hummingbirds.

Bee's Bliss Creeping sage
(*Salvia* 'Bee's Bliss')

Plant Info:

- Fragrant groundcover with attractive gray leaves and periwinkle blue flowers, reaches to 2' tall, 8' wide.

Exposure:

- Full sun.

Soil:

- Well-drained soils are best, though adaptable.

Water:

- Low water requirements, especially in summer.

Pruning and Care:

- Prune and pinch back center of plants to encourage dense, even spread. Young plants tend to mound in the center if not pruned, and if condition isn't corrected when plants are young, older woody stems may not resprout.
- Prune in late fall/early winter as new growth begins. As with most sages, do not cut into hard wood as it does not resprout reliably.
- Do not fertilize. Rich soil results in excessive growth that causes woody plants to fall apart and promotes aphids and root rot.
- Wash off aphids with a hose or dilute soapy water, or prune and dispose of infested stems. Ladybugs can be released to control aphids, though the problem corrects itself as the new growth hardens and the weather gets hotter.
- Prone to mildew but condition resolves itself with drier weather.

Habitat Value:

- Hummingbirds and bees feed on nectar and pollen.

Cleveland sage
(*Salvia clevelandii*)

Plant Info:

- Woody, highly fragrant semi-evergreen shrub with violet-blue flowers in late spring. Fast growing rounded shrub reaches 3' - 5' in height.

Exposure:
- Full sun.

Soil:
- Well-drained soils.

Water:
- Low water needs, especially in the summer.

Pruning and Care:
- Pinch back young plants regularly to encourage dense growth and increased flowering.
- Prune back plants, especially in the first few years, by ½ to 1/3 every winter. Cut back each stem leaving two buds on the non-woody stems. If plant requires more pruning, proceed cautiously.
- As sage ages it grows less vigorously and requires light pruning and dead-heading.
- Never cut into woody stems.
- Do not fertilize. Rich soil results in excessive growth that causes woody plants to fall apart and promotes aphids and root rot.
- Wash off aphids with a hose or dilute soapy water, or prune and dispose of infested stems. Ladybugs can be released to control aphids, though the problem corrects itself as the new growth hardens and the weather gets hotter.
- Prone to mildew but condition resolves itself with drier weather.

Habitat Value:
- Hummingbirds and bees feed on its nectar and pollen.

Cleveland sage flowers and shrub

Black sage Terra Seca flowers

Terra Seca Black sage
(*Salvia mellifera* 'Terra Seca')

Plant Info:
- Woody, low-mounding, semi-evergreen groundcover with light blue to white flowers in spring; grows to 2' high and spreads 6' - 8'.

Exposure:
- Full sun.

Soil:
- Well-drained soils.

Water:
- Needs very little water, especially in summer.

Pruning and Care:
- Pinch back young plants regularly to encourage dense growth and

Black sage Terra Seca spreading shrub

Hummingbird sage plants and flowers

Hummingbird sage flowers

Hummingbird sage plants

increased flowering.

- Prune back plants, especially in the first few years, by ½ to 1/3 every winter. Cut back each stem leaving two buds on the non-woody stems. If plant requires more pruning, proceed cautiously.
- As sage ages it grows less vigorously and requires light pruning and dead-heading.
- Never cut into older, woody stems.
- Do not fertilize. Rich soil results in excessive growth that causes woody plants to fall apart and promotes aphids and root rot.
- Wash off aphids with a hose or dilute soapy water, or prune and dispose of infested stems. Ladybugs can be released to control aphids, though the problem corrects itself as the new growth hardens and the weather gets hotter.
- Prone to mildew but condition resolves itself with drier weather.

Habitat Value:

- Provides nectar and pollen for hummingbirds and bees.

Hummingbird sage
(*Salvia spathacea*)

Plant Info:

- Semi-evergreen herbaceous groundcover with fruity scent foliage and deep-red flowers arranged pagoda-like on stems from late winter through early summer; grows to 2’ tall and spreads slowly by underground stems.

Exposure:

- Partial shade. Does well under oak trees.

Soil:

- Adaptable.

Water:

- Low water requirement.

Pruning and Care:

- Dead-head after flowering to avoid spindly stems that can flop over the following year.
- Remove or stake flower stems on young plants before they break.
- Dig up out-of-bounds rhizomes in late fall or winter. These can be used to start another colony.
- Prone to mild powdery mildew, especially if over watered. Cut stems to ground and discard diseased foliage.

Habitat Value:

- A hummingbird magnet.

Woolly blue curls
(*Trichostema lanatum*)

Plant Info:

- Woody, fragrant evergreen shrub with spectacular blue or purple velvet flowers that can bloom year round; grows to 3’ – 4’ tall, and wide.

Exposure:

- Full sun; better with some shade at plant base.

Soil:

- Well-drained soil.

Water:

- Low especially in the summer; extremely susceptible to root rot. Plant near other species with similar summer water needs.

Pruning and Care:

- Pinch back first flowering shoots to encourage more flowering stems; plant will produce more roots and stems.
- May only last one year so treat as an annual; be prepared to remove dead plant then replant in a different location.
- Never fertilize; results in excessive growth that causes woody plants to fall apart; it also promotes aphids and root rot.
- Naturalized seedlings may be better adapted to a site than the parent, so after first year, allow some flowers to go to seed.

Habitat Value:

- Provides nectar/pollen for hummingbirds and bees.

Woolly blue curls velvety flowers

Woolly blue curls shrub with flowers

California fuchsia
(*Zauschneria californica* or *Epilobium canum*)

Plant Info:

- Semi-evergreen subshrubs, prodigious bright, orange-red tubular flowers on arching stems in fall; grows from 2’ to 4’ tall.

Exposure:

- Full sun to partial shade.

Soil:

- Adaptable but best in well-drained soil.

Water:

- Low water needs, occasional summer water.

California fuchsia flowers

California fuchsia flowers and plant

California poppy flowers

Baby blue eyes flowers

Tidy tip flowers with baby blue eyes

Goldfields flowers

Pruning and Care:

- Do not prune hard until plants are 2 years old then prune back to the ground (1"-2" stubs) in winter before new growth appears. Pinch stems in spring to encourage dense growth.
- Needs care; can look messy if allowed to seed around and spread by underground stems. Remove unwanted seedlings completely.
- Leafhoppers can infest leaves; will suck on tender young leaves and stems. Oil sprays may prevent small outbreaks.
- Handpick any caterpillars that appear just after dark; treat with *Bacillus thuringiensis* for larger outbreaks.

Habitat Value:

- Provides food for hummingbirds and bees in fall when little else is in bloom.

Annual Wildflowers

California poppies

(*Eschscholzia californica*)

Baby blue eyes

(*Nemophila menziesii*) may be present

Tidy tips

(*Layia platyglossa*) may be present

Goldfields

(*Lasthenia californica*) may be present

- Annual wildflower seeds may be distributed in the fall before the rainy season when days are warm and nights are cool.
- When flowers are spent and plant shrivels, remove by hand if desired. Collect seed for following year.
- Many wildflowers will reseed and blossom the following year if the soil does not receive summer irrigation.

References

Bornstein, Carol, Davis Fross, and Bart O'Brien. 2005. *California Native Plants for the Garden*. Cachuma Press. Los Olivos, California.

Las Pilitas Nursery. 2007. http://www.laspilitas.com/plants/plants.htm. Accessed May 2007.

Magnolia Gardens Nursery. 2007. http://www.magnoliagardensnursery.com/productdescrip/Muhly_Gulf.html. Accessed May 2007.

Michigan Dept. of Natural Resources. 2004. *Tree Maintenance Guidelines*. http://www.midnr.com/Publications/pdfs/ForestsLandWater/UrbanAndCommunity/IC4108-1TreeMaintenanceguidelines031904.pdf. Accessed June 2007.

O'Brien, Bart, Betsey Landis, and Ellen Mackey. 2006. *Care & Maintenance of Southern California Native Plant Gardens. Cuidado y mantenimiento de jardines de plantas natives del sur de California*. Published by Metropolitan Water District of Southern California, Los Angeles, California.

TreePeople. 2005. *Trees are Good, Tree Care Information*. http://www.treesaregood.com/treecare/pruning_mature.aspx. Accessed June 2007.

Photo Credits

Pictures by Barbara Eisenstein except:

Pink hairgrass, golden currant shrub, and black sage hybrid flowers - Ellen Mackey

Salvia 'Bee's Bliss' – photos by Dave

Tidy tips and goldfields by Drew Ready

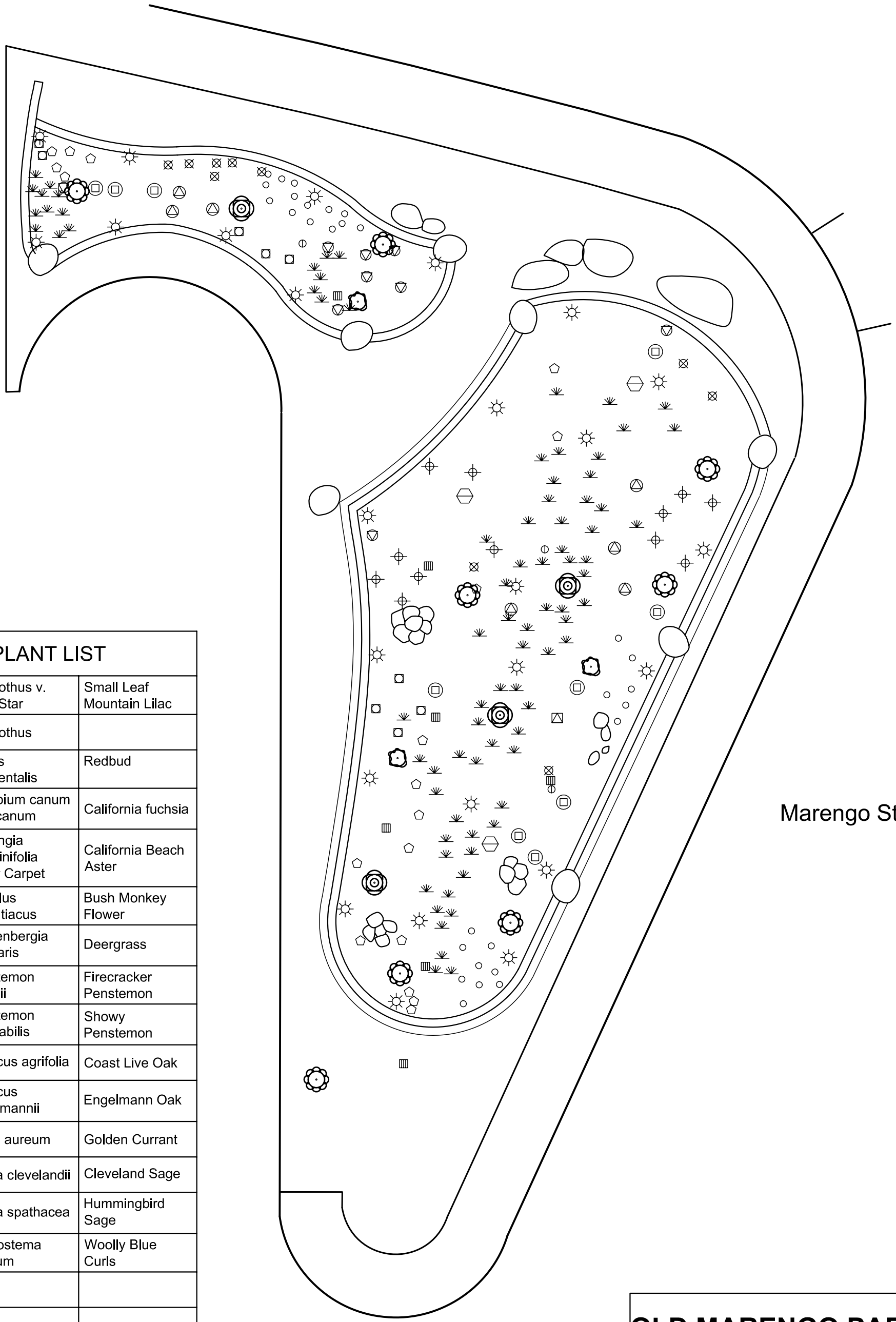

PLANT LIST		
	Ceanothus v. Dark Star	Small Leaf Mountain Lilac
	Ceanothus	
	Cercis occidentalis	Redbud
	Epilobium canum ssp. canum	California fuchsia
	Lessingia filanginifolia Silver Carpet	California Beach Aster
	Mimulus aurantiacus	Bush Monkey Flower
	Muhlenbergia capillaris	Deergrass
	Penstemon eatonii	Firecracker Penstemon
	Penstemon spectabilis	Showy Penstemon
	Quercus agrifolia	Coast Live Oak
	Quercus engelmannii	Engelmann Oak
	Ribes aureum	Golden Currant
	Salvia clevelandii	Cleveland Sage
	Salvia spathacea	Hummingbird Sage
	Trichostema lanatum	Woolly Blue Curls
	Sprinkler Head	
	Dry Well	

OLD MARENGO PARK

Planting Plan

As Built December 2007

5. WEED MANAGEMENT

A weed is defined as a plant that is not valued where it is growing and is usually of vigorous growth, especially one that tends to overgrow or choke out more desirable plants (Bell and Lehman 2005). A weed-choked garden destroys the beauty of even the most carefully planned project. Grasses are especially notorious for rapidly re-seeding themselves; persistence is needed to keep the seedlings at bay. A commitment to a beautiful native plant landscape entails a commitment to weed control.

This chapter is divided into two sections:

- Weed Identification and
- Weed Management Methods.

Weed Identification

This section contains Weed Profiles for fifteen common weeds found in the neighborhood based on a survey conducted on April 24, 2007. The profiles include images, a short description, and suggested control methods. This list is not comprehensive but a basic list. These plants should be removed as soon as possible, but definitely before the plants flower and seed. Other similar weedy species will continue to move into the area as wind and bird species are attracted to the area and bring with them more weed seed. Plants that resemble these may be weeds of a different species within the same genus and also should be removed.

The following information and pictures are from *Weeds of California and other Western States* (DiTomaso and Healy 2007). (to order: (http://anrcatalog.ucdavis.edu/IntegratedPestManagement/3488.aspx)

The weeds described here include:

Broad Leaf Weeds:
annual sowthistle (*Sonchus oleraceus*)
clover (*Medicago, Trifolium* spp.)
common knotweed (*Polygonum arenastrum*)
creeping woodsorrel (*Oxalis corniculata*)
English plantain (*Plantago lanceolata*)
little mallow (*Malva parviflora*)
petty spurge (*Euphorbia peplus*)
redstem filaree (*Erodium cicutarium*)
smooth cat's ear (*Hypochaeris glabra*)
spotted spurge (*Euphorbia maculata*)
yellow nutsedge (*Cyperus esculentus*)
yellow rocket (*Barbarea vulgaris*)

Grasses:
fountain grass (*Pennisetum setaceum*)
red brome (*Bromus madritensis* ssp. *rubens*)
ripgut grass (*Bromus diandrus*)

The photographs show the mature plant, indicative features and/or the seedling.

In addition to the original plant list, some tree species have appeared and continue to germinate. These include: sycamore, coast live oak, Chinese elm, and palms. These 'volunteers' change the look and planting plan for the park. Chinese elm and palms, in particular, should be pulled out immediately as they will become increasingly difficult to remove as the seedlings mature.

Remove all Chinese elm seedlings

Nutsedge and palm seedlings—bane of new garden

Annual sowthistle

(*Sonchus oleraceus*) *Asteraceae*

flowers

clasping leaf base

immature plant

- Size – grows to 4' tall, lanky
- Yellow dandelion-like flowers
- Divided leaves at the plant base; clasping leave bases on stems
- Milky juice when plants cut
- Regular hand removal before seed set for control

Clovers

(*Medicago* spp., *Trifolium* spp.) *Fabaceae*

Medicago polymorpha—seedling

Trifolium hirtum—flowers & stems

Trifolium repens—leaves

- Size stems grow horizontally; can form dense mats as stems can root
- White, yellow to red flower (depending on species)
- Leaves are shamrock-like with 3 heart-shaped leaflets
- Regular hand removal before seed set for control

Common knotweed

(*Polygonum arenastrum*) *Polygonaceae*

- Stems grow horizontally with wiry stems to 3'
- Flowers are small, inconspicuous, white and reddish
- Leaves small and directly attached to stems
- Hand remove before seeds develop to control population

mature plant

seedling

Creeping woodsorrel

(*Oxalis corniculata*) *Oxalidaceae*

- Low-growing perennial; creeping stems can root from runners
- Yellow flowers
- Shamrock-like leaves, green to dark purple undersides; fold in half at midday and night.
- Hand weed to control mature plants and seedlings


seedling


yellow flowers


with reddish foliage

English plantain

(*Plantago lanceolata*) *Plantaginaceae*

- Swirl of leaves 6”-8” long at the ground
- Inconspicuous white flowers
- Long leaves with parallel veins & taproot
- Hand removal for control


leaves


seedling


flowering stem

Little mallow

(*Malva parviflora*) *Malvaceae*

- Grows to ~ 2’ tall; generally low-growing and spreading
- White to pinkish flowers
- Palmate leaves
- Hand removal before seed set for control


seedling


mature plant


flowering & fruiting stem

Petty spurge

(*Euphorbia peplus*) *Euphorbiaceae*

- Grows to 1 ½' tall
- Inconspicuous greenish flowers
- Bright green leaves
- Exudes a milky sap
- Inconspicuous seeds
- Hand remove before seeds mature

flowers and leaves

entire plant

Redstem filaree

(*Erodium cicutarium*) *Geraniaceae*

- Grows to ~ 1' tall
- Small pink to reddish-lavender flowers with 5 petals
- Divided leaves from a rosette on the ground
- Seeds resemble a stork's head or beak
- Regular hand removal before seed set for control

seedling

mature plant with flowers

flowers & fruits

Smooth cat's ear

(*Hypochaeris glabra*) *Asteraceae*

- Grows to about 1 ½' tall
- Base leaves shallow lobed
- Yellow dandelion-like flowers on branched stems
- Milky juice when plants cut
- Regular hand removal before seed set for control

seedling

mature plant with flowers

Spotted spurge

(*Euphorbia maculata*) *Euphorbiaceae*

- Grows to 1 ½' tall
- Inconspicuous greenish flowers
- Bright green or reddish leaves
- Exudes a milky sap
- Inconspicuous seeds
- Hand remove before seeds mature

seedling, green form

seedling, red form

green form with milky sap

plant - red form

Yellow nutsedge

(*Cyperus esculentus*) *Cyperaceae*

- Grows to about 3' tall; generally found in areas with summer irrigation
- Brownish flowers on 3-sided stems
- Grass-like leaves folded lengthwise
- Reproduces by seeds and bulbs; ***must*** remove seedlings early to prevent entrenched infestation; otherwise difficult to control

flowering stems

root 'nuts' or tubers

seedling

Yellow rocket

(*Barbarea vulgaris*) *Brassicaceae*

- Grows to about 3' tall
- Bright yellow flower with 4 petals
- Lower leaves deeply lobed; upper leaves smaller
- Produces long linear pods
- Regular hand removal before seed set for control

seedling

deeply lobed leaves

flowering stems

Grasses

Grasses, such as, Bermuda grass (*Cynodon dactylon*), are extremely difficult to remove effectively. Persistence is necessary to keep them from invading and taking over the landscape. Remove plant while still young; before plant goes to seed.

Fountain grass

(*Pennisetum setaceum*) *Poaceae*

- Grows to about 3' tall
- Reddish to greenish flowers in feather-like spike
- Highly invasive
- Regular manual removal before seed set for control

mature plant

Red brome

(*Bromus madritensis* ssp. *rubens*) *Poaceae*

- Grows to about 1 1/2' tall
- Bright green grass dries to beige with dense reddish seed heads
- Seed heads fall apart easily and embed in socks, animals ears, etc.
- Highly invasive
- Regular manual removal before seed set for control

mature plant

mature, dried seed heads

Ripgut grass

(*Bromus diandrus*) *Poaceae*

- Grows to about 2' tall
- Bright green grass dries to beige with
- very long coarse stickery seed heads
- Seed heads fall apart easily and embed in socks, animals eyes, ears, etc.
- Highly invasive
- Regular manual removal before seed set for control

flower cluster

All photo credits for weed images are copyrighted by the Regents of the University of California and used by permission. (http://anrcatalog.ucdavis.edu/)

Weed Control Methods

Weed seedlings can quickly choke newly planted areas. Weeds take advantage of the disturbed soil as well as the irrigation water to germinate and grow. Weed control should be scheduled routinely (weekly) to stave off an uncontrollable invasion.

The Los Angeles County Weed Management Area (WMA) supports an Integrated Pest Management (IPM) approach that "fosters beneficial vegetation along with suppressing undesirable plants" (Bell and Lehman 2005). The following sections are summarized from the Bell and Lehman text.

Prevention

The goal of prevention is to prevent establishment of unwanted vegetation in areas that are currently lacking it. Sanitation and education are the most appropriate methods in this area.

Sanitation refers to the use of plant materials and equipment that do not harbor weed seed or live weeds that can contaminate a new area. Methods for sanitation include:

- Checking new or replacement plants to ensure that no weeds are hitching a ride to the planting site.
- Cleaning maintenance equipment (mower, weed whip, etc.) to ensure that fresh weed seed are not brought into the park area.

Education refers to outreach activities that inform the public of vegetation management issues to influence their behavior toward these issues. Resources for public education include:

- Los Angeles County, Weed Management Area's children's book, *Invasive Weeds, What they are and why we should care about them*. This book can be downloaded from the Agricultural Commissioner's web site .http://lacountywma.org/publications/childrens_book_on_invasives.pdf

- The California Invasive Plant Council published *Don't Plant a Pest, Southern California Version*, which is available in English and Spanish versions.

  Available through www.cal-ipc.org/ for purchase or download.

- The Watershed Council's WEEDWatch Program (http://weedwatch.lasgrwc.org/) has valuable information on outreach, mapping, resources and news related to weed programs in southern California.

Control

Control includes actions taken to reduce or suppress weeds in specific sites or locations. The goal is to eliminate or significantly reduce the damage done by the weed, not necessarily to eradicate the weed. **Physical** methods are most appropriate for this area. **Chemical** methods are ***not*** allowed.

Physical weed control refers to methods that uproots, buries, cuts, smothers, or burns vegetation. The most appropriate methods for this park include: solarization, mulching, hand pulling, flaming, and weed-whipping.

- **Solarization** refers to a simple method to eliminate or kill weed seed and soil pathogens before planting. The treatment area is watered if dry, completely and tightly covered with clear plastic tarp that is left in place 4 to 6 weeks. The top 6 inches of soil will heat to 125 degrees when solarization is done properly. Solarization is most effective when done in July, August and September. For more information on solarization.

Rancho Santa Ana Botanic Garden, wildflower garden, before and after

- **Mulching** refers to a simple, relatively inexpensive method of controlling weeds by spreading a protec-

tive layer of material on the ground that effectively reduces weed growth by excluding light from the soil. Mulch protects the soil and plant roots from evaporation, extreme temperature fluctuations, pests and weeds.

Mulch materials can be organic (compost, manure, bark chips, newspapers, straw, hay, sea weed much and pine needles) or inorganic (rocks, gravel, carpet padding, plastic sheeting, landscape fabrics, ground rubber tires).

Mulch layers need to be maintained at 3" – 4" deep and replenished as necessary. Mulch breaks down quickly here in Southern California so renew mulch at least in early summer and early winter. Care should be taken to keep mulch at least 4" away from the base of the plant.

Mulch can be made from greenwaste generated on-site as a "green" solution to the waste issue. Greenwaste that has insects or diseased trimmings should be discarded.

Otherwise, mulch can be delivered through the Pasadena Department of Public Works, Free Mulch Program (http://ww2.cityofpasadena.net/publicworks/smiwmii/PDF/Mulch%20Program.pdf). Schedule only full loads (10 cu. yds.) and allow 3 days to 2 weeks advance notice depending on demand.

- **Hand pulling** is labor-intensive and requires persistence to achieve a level of control but allows volunteers an accessibility not found with other equipment-intensive forms of control, does not result in exposure to chemicals, and if done carefully does not cause excessive soil disturbance. Weeds can be loosened in the soil using a weed fork or trowel. Volunteers should wear gloves to protect hands from blisters and scraps. The entire plant including the root should be removed; top snatches can produce more growth from weeds.

Chemical weed control methods refer to the use of herbicides to control weeds.

Any chemical weed control in public situations will be conducted by the appropriate public agency and should be accomplished under the permit of a Pest Control Advisor (PCA) and applied by at least a Qualified Applicator's Certificate (QAC). Of course all chemicals considered for use within the park should be EPA approved. Never use any chemical weed killers without first obtaining a permit from the County.

References

Bell, Carl and Dean Lehman. 2005. *Best Management Practices for Vegetation Management*. Ellen Mackey, editor. Los Angeles Weed Management Area. Los Angeles, California. http://acwm.lacounty.gov/pdf/WeedBMPres.pdf

DiTomaso, Joseph, and Evelyn Healy. 2007. *Weeds of California and Other Western States. Volumes 1 & 2*. University of California, Division of Agriculture and Natural Resources, Publication 3488.

Rancho Santa Ana Botanic Garden. *Five Steps to Weed Control Through Solarization*. http://www.rsabg.org/images/stories/horticulture/RSABG_Solarization.pdf. Accessed May 2007.

O'Brien, Bart, Betsey Landis, and Ellen Mackey. 2006. *Care & Maintenance of Southern California Native Plant Gardens. Cuidado y mantenimiento de jardines de plantas natives del sur de California.* Pages/paginas: viii, 238. Metropolitan Water District of Southern California, Los Angeles, California.

Hand weeding

6. PEST MANAGEMENT

If you build it, they will come. Newly installed landscape is an open invitation to animals of all kinds, including pests. Landscape pests are either vertebrate (ex. squirrels) or invertebrate (ex. aphids). Both types can cause damage so early identification and intervention is crucial. University of California Pest Notes is an invaluable, bilingual resource for gardeners (http://www.ipm.ucdavis.edu/PMG/menu.homegarden.html). Keep in mind that wildlife, including pests, will be attracted to the native landscape so vigilance is important.

Ground squirrels (*Spermophilus beecheyi*), pocket gophers (*Thomomys* spp.), rabbits (*Lepus californicus*), cottontails (*Sylvilagus audubonii*), and meadow mice (*Microtus californicus*) may not invade in the park due to the distance from habitat. If one or several of these burrowing species moves in and becomes problematic, it would be wise to consult a professional rather than use trapping or chemical methods of elimination in this small park setting. The main concern is the effect on non-target species, such as, children or lizards. If significant plant loss begins, install replacements within gopher cages first (underground and above ground). Cages will allow some root and branch development before pruning by these vegetarians. These native plants evolved with animal species that prune them, so once established damage should be minimal.

Rodent control should only be conducted by a licensed (Qualified Applicator's Certificate, QAC) professional or under the guidance of a Pest Control Advisor (PCA) by a certified technician.

Rats and House Mice

Rats and house mice prefer the environment of and around habitable structures and are not generally considered a landscape problem. Keep the landscape trimmed, conduct routine litter removal, and eliminate of wood scraps or debris that might create habitat for them to prevent rat or mouse infestations. If the numbers begin to climb and become problematic, control should be conducted only by a licensed (QAC) professional or under the guidance of a PCA by a certified technician.

Invertebrate Pests

Insects are an integral component of a balanced ecosystem. There are numerous chewing, boring, and sucking insects that inhabit a landscape. It is only when the populations become out of balance that these creatures become a problem. The use of chemicals for the reduction of insect populations may reduce the pests for a time, but usually does not create a balance that is sustainable. Furthermore, pesticides reduce or eliminate populations of beneficial insects, often causing more harm than good in the long run. Sometimes it's advisable to simply wait to see if the problem resolves itself. Chapter 4, the Plant Maintenance chapter specifies some insect problems and ways to resolve them. University of California Pest Notes has extensive information on a host of insect problems. Otherwise, the *Care & Maintenance Manual* (O'Brien et. al. 2007) lists insect problems both by species and by host plant in Appendix A.

Integrated Pest Management (IPM), also discussed in the Weed Control section, is an effective system of pest management. IPM views the landscape as a holistic system and seeks to find methods to balance that system rather than treat only one aspect of it. According to the US EPA (http://www.epa.gov/opp00001/factsheets/ipm.htm) IPM seeks to "manage pest damage by the most economical means, and with the least possible hazard to people, property, and the environment." If you have an insect infestation that is causing damage to the landscape, however, it is important to get an evaluation from a licensed Pest Control Advisor to prescribe a program of treatment.

Beneficial Lizards and Insects

Beneficial lizards and insects are valuable allies in pest control.

Helpful lizard and scat

Lizards, such as, western fence lizards (*Sceloporus occidentalis*) (picture above), side-blotched lizards (*Uta*

stansburiana) and southern alligator lizards (*Elgaria multicarinata*), are welcome additions to a native landscape and are **NOT pests**! They should be treated as valued allies in insect control. They are actually part of a landscapes biocontrol if allowed to move freely through a landscape without fear of being captured by a curious and excited child. Lizards get their food and water by consuming insects in any garden so consider them helpful insect predators. Look for small black cigars-shaped droppings with a white tip (see above) that indicate the presence of lizards.

Ladybug larvae – good guy.

Ladybug pupa – good guys.

Common black ground beetle – good guy.

Praying mantis - good guy.

Many garden insects are controlling (eating) other insects. Ladybug larvae, common black ground beetle, brown and green lacewings, praying mantis, and centipedes are your assistants. Don't kill them with insecticides. One ladybug will eat 5,000 aphids.

References

Flint, Mary Louise. 1998. *Natural Enemies Handbook, The Illustrated Guide to Biological Pest Control.* Statewide Integrated Pest Management Project, University of California, Division of Agriculture and Natural Resources, University of California Press, Berkeley, California.

Flint, Mary Louise 2001. *IPM in Practice, Principles and Methods of Integrated Pest Management*. Statewide Integrated Pest Management Project, University of California, Division of Agriculture and Natural Resources, Publication 3418.

Los Angeles Co. Department of Public Works. In preparation. *Los Angeles River Landscape Maintenance Manual*. Los Angeles Department of Public Works.

O'Brien, Bart, Betsey Landis, and Ellen Mackey. 2006. *Care & Maintenance of Southern California Native Plant Gardens. Cuidado y mantenimiento de jardines de plantas natives del sur de California.* Pages/paginas: viii, 238. Metropolitan Water District of Southern California, Los Angeles, California.

UC IPM Online. *Statewide Integrated Pest Management Program*. 2005. How to Manage Pests in Homes, Gardens, Landscapes, and Turf. http://www.ipm.ucdavis.edu/PMG/menu.homegarden.html. Accessed April 2007.

US Environmental Protection Agency. *Integrated Pest Management Principles (IPM)*. http://www.epa.gov/opp00001/factsheets/ipm.htm. Accessed April 2007.

7. HARDSCAPE, SITE AMENITIES, AND GRAFFITI

Hardscape

Hardscape elements include asphalt access roads, permeable concrete, bike trails and pathways, concrete walkways, pavers, decomposed granite and other inert paving materials, as well as, boulders, cobble, and walls. The Old Marengo Park has simple hardscape elements including DG pathways and low cobble seatwalls. Maintenance will consist of:

- Keep paths clear of mulch and rocks as these may become a safety hazard. Use a rake rather than gas-powered blowers (noise and air pollution) or water (waste of a valuable resource) to clean the path surface.
- Check the decomposed granite (DG). DG is an inert surfacing material suitable of pedestrian paths. DG is composed of fine ground rock materials 3/8" in diameter and less. A stabilizing material was incorporated into the material at installation. During rainy weather the DG can erode or settle. Should this occur, minor repairs can be completed with a rake and tamped with a shovel. Excess material loss or damage that cannot be easily repaired should be reported immediately to the County.
- Monitor the cobble seatwall for graffiti and damage on a regular basis. Any area that appears to be unsafe should be immediately barricaded until it can be repaired.

DG path and seating wall

Site Amenities

Site amenities include benches, trash receptacles, drinking fountains, gates, bollards, bicycle racks, and lighting. No site amenities are planned for the park beyond an identifying park sign. Should opportunities arise in the future, refer to for specific types of County approved site amenities. Maintenance procedures for these amenities should be incorporated into the Maintenance Manual.

Signage and Public Art

Stone entry sign at Old Marengo Park

The park stone entry sign should be checked routinely to ensure that it is not cracking, and that any graffiti is quickly eradicated.

Identification for the native plants is planned as a future project but is currently unfunded.

Public art includes decorative signage, decorative fencing, custom gates, or sculptures included in the park. No public art is currently planned for the park. It may be considered at some future date. If so, maintenance procedures for these amenities should be incorporated into the Maintenance Manual.

Graffiti

The best deterrent to graffiti is immediate removal. If graffiti is removed within 24 hours of its first appearance it is less likely to reappear. Graffiti should be reported to the governing agency (see Emergency Contacts).

Graffiti removal with steam method—after!

IMPORTANT!! Request removal of graffiti by steaming or other method; *NOT* by painting rocks! Steaming graffiti rather than painting retains the beauty of the rock surface. Imagine the stone entry sign covered with paint!

Rock face painted grey to hide graffiti

References

Los Angeles Co. Department of Public Works. 2004. *Los Angeles River Master Plan, Landscaping Guidelines and Plant Palettes.* Los Angeles Department of Public Works.

Los Angeles Co. Department of Public Works. In preparation. *Los Angeles River Landscape Maintenance Manual*. Los Angeles Department of Public Works.

8. LITTER CONTROL

The Arroyos & Foothills Conservancy is responsible for all trash, debris, and other unsightly material within the park. Volunteers will police the area weekly to remove and dispose of litter in an appropriate way. The City of Pasadena will pick up large items such as, sofas and mattresses.

Adjacent to the park is a bus stop without a trash receptacle. Litter levels here may be higher than other areas.

trash receptacle

The neighborhood has installed a trash receptacle adjacent to the existing oak tree on the south end of the park. Recent visits indicate that the neighbors are using the trash receptacle for at least dog waste.

Dog waste is serious problem in the park. Frequent patrolling and cleanup is necessary. Signage, disposal bags and a trash receptacle may also help alleviate the problem.

Dog waste and pick up with a plastic bag

Appendix A

Soils Test Results

WALLACE LABORATORIES

365 Coral Circle
El Segundo, CA 90245
phone (310) 615-0116 fax (310) 640-6863

October 2, 2006

geurick@earthlink.net
Rick Carron
Altadena Foothills Conservancy
PO Box 3
Altadena, CA 91003-0003

RE: Altadena Pocket Park

Dear Rick,

The salinity of the 0-6" sample is excessively high at 11.22 millimho/cm due to excessive nitrogen fertility. Nitrogen is about 50 times greater than desired. Most plants are not expected to tolerate this level of salinity and nitrogen. The fertility is high except for moderate potassium. The pH is acidic at 6.71.

The 6-18" sample has moderate salinity at 0.87 millimho/cm. The fertility is high but not excessively high with moderate potassium. The pH is alkaline at 7.38.

Recommendations

General soil preparation for turf, ground cover and shrub areas. Broadcast the following uniformly. The rates are per 1,000 square feet. Incorporate it homogeneously 6 inches deep:

Soil organic amendment – about 3 cubic yards

Leach to reduce the salinity and nitrogen prior to planting. Reduce the salinity to less than 3 millimho/cm.

For preparation of backfill mix for container plants/boxed trees, incorporate uniformly the following materials into leached soil. Rates are expressed per cubic yard:

Soil organic amendment - about 15% by volume

Soil organic amendment:

1. Humus material shall have an acid-soluble ash content of no less than 6% and no more than 20%.
2. The pH of the material shall be between 6 and 7.5.
3. The salt content shall be less than 10 millimho/cm @ 25° C. on a saturated paste extract.
4. Boron content of the saturated extract shall be less than 1.0 parts per million.
5. Silicon content (acid-insoluble ash) shall be less than 50%.
6. Calcium carbonate shall not be present if to be applied on alkaline soils.

Soil Analyses **Plant Analyses** **Water Analyses**

7. Types of acceptable products are composts, manures, mushroom composts, straw, alfalfa, peat mosses etc. low in salts, low in heavy metals, free from weed seeds, free of pathogens and other deleterious materials.
8. Composted wood products are conditionally acceptable [stable humus must be present]. Wood based products are not acceptable which are based on red wood or cedar.
9. Sludge-based materials are not acceptable.
10. Carbon:nitrogen ratio is less than 25:1.
11. The compost shall be aerobic without malodorous presence of decomposition products.
12. The maximum particle size shall be 0.5 inch, 80% or more shall pass a No. 4 screen for soil amending.

Maximum total permissible pollutant concentrations in amendment in parts per million on a dry weight basis:

arsenic	20	copper	150	selenium	50
cadmium	15	lead	200	silver	10
chromium	300	mercury	10	vanadium	500
cobalt	50	molybdenum	60	zinc	300
		nickel	100		

Higher amounts of salinity or boron may be present if the soils are to be preleached to reduce the excess or if the plant species will tolerate the salinity and/or boron.

Test the soil to determine the best maintenance program.

Sincerely,

Gam A. Wallace, Ph. D.
Executive Director
GAW:n

Soil Analyses Plant Analyses Water Analyses

WALLACE LABS	SOILS REPORT		September 29, 2006
365 Corral Circle	Location	Altadena Pocket Park	
El Segundo, CA 90245	Requester	Rick Carron, Altadena Foothills Conservancy	
(310) 615-0116	graphic interpretation: * very low, ** low, *** moderate, **** high, ***** very high		

ammonium bicarbonate/DTPA

extractable - mg/kg soil
Interpretation of data

low	medium	high
0 - 7	8-13	over 13
0-60	60 - 120	121-180
0 - 3	3 - 5	over 5
0- 0.5	0.6- 1	over 1
0 - 1	1 - 1.5	over 1.5
0- 0.2	0.2- 0.5	over 0.5
0- 0.2	0.2- 0.5	over 1

ratio of calcium to magnesium needs to be more than 2 or 3

should be less than potassium

The following trace elements may be toxic. The degree of toxicity depends upon the pH of the soil, soil texture, organic matter, and the concentrations of the individual elements as well as to their interactions.

The pH optimum depends upon soil organic matter and clay content. For clay and loam soils: under 5.2 is too acidic, 6.5 to 7 is ideal, over 8.0 is too alkaline

The ECe is a measure of the soil salinity:
1-2 affects a few plants
2-4 affects some plants,
> 4 affects many plants.

problems over 150 ppm
good 20 - 30 ppm

toxic over 800

toxic over 1 for many plants

increasing problems start at 3

est. gypsum requirement-lbs./1000 sq. ft.

Sample ID Number	06-272-17		06-272-18	
	0-6"		6-18"	
elements		graphic		graphic
phosphorus	31.70	*****	23.88	*****
potassium	78.90	***	85.54	***
iron	38.24	*****	28.64	*****
manganese	16.91	*****	2.55	****
zinc	11.91	*****	8.73	****
copper	5.72	*****	7.57	*****
boron	0.39	***	0.12	**
calcium	342.70	***	322.15	***
magnesium	127.10	****	68.51	***
sodium	178.26	***	42.17	*
sulfur	143.89	***	8.92	*
molybdenum	0.06	***	0.04	***
aluminum	0.15	*	n d	*
arsenic	0.33	*	0.20	*
barium	0.81	*	1.08	*
cadmium	0.14	*	0.09	*
chromium	0.12	*	0.06	*
cobalt	0.62	**	0.09	*
lead	7.80	***	19.11	***
lithium	0.37	*	0.35	*
mercury	n d	*	n d	*
nickel	0.25	*	0.15	*
selenium	n d	*	n d	*
silver	n d	*	n d	*
strontium	1.77	*	2.27	*
tin	n d	*	n d	*
vanadium	0.35	*	0.21	*
Saturation Extract				
pH value	6.71	***	7.38	***
ECe (milli-mho/cm)	11.22	*****	0.87	**
		milliequ		milliequ/l
calcium	1,510.4	75.5	75.5	3.8
magnesium	267.9	22.1	16.5	1.4
sodium	436.7	19.0	61.0	2.7
ammonium as N	115.7	8.6		
potassium	32.6	0.8	7.5	0.2
cation sum		126.0		8.0
chloride	159	4.5	10	0.3
nitrate as N	1,044.5	74.6	66	4.7
phosphorus as P	1.0	0.0	0.5	0.0
sulfate as S	309.5	19.0	18.4	1.2
anion sum		98.1		6.1
boron as B	1.00	****	0.10	*
SAR	3.7	**	1.7	**
	30		7	
relative infiltration rate	fair/slow		slow/fair	
estimated soil texture	gravelly sandy loam		sandy loam	
lime (calcium carbonate)	no		no	
organic matter	low/fair		low/fair	
moisture content of soil	1.2%		3.8%	
half saturation percentage	13.0%		13.0%	

Elements are expressed as mg/kg dry soil or mg/l for saturation extract.
pH and ECe are measured in a saturation paste/extract. nd means not detected.

Appendix B

Irrigation and Planting Details

NOTE: INSTALL WITH A MINIMUM CLEARANCE OF 12" FROM THE PORT, FLOOR, OR GRADE. INSTALL FOR EASY ACCESSIBILITY. BACKFLOW ASSEMBLY SHALL BE LOCATED IN SHRUB AREAS TO ACHIEVE VISUAL SCREENING.

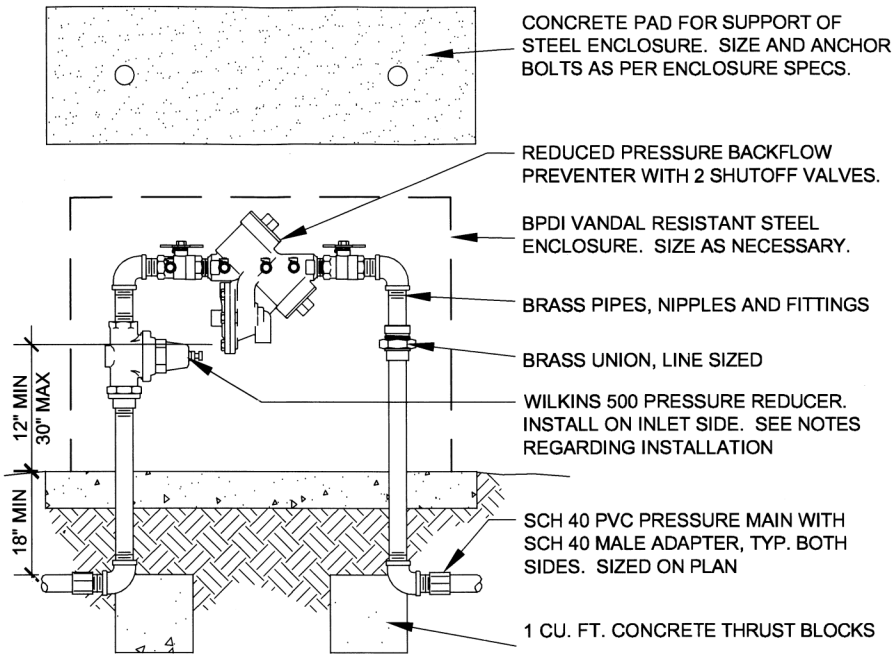

A BACKFLOW DEVICE AND PRESSURE REGULATOR

NOT TO SCALE

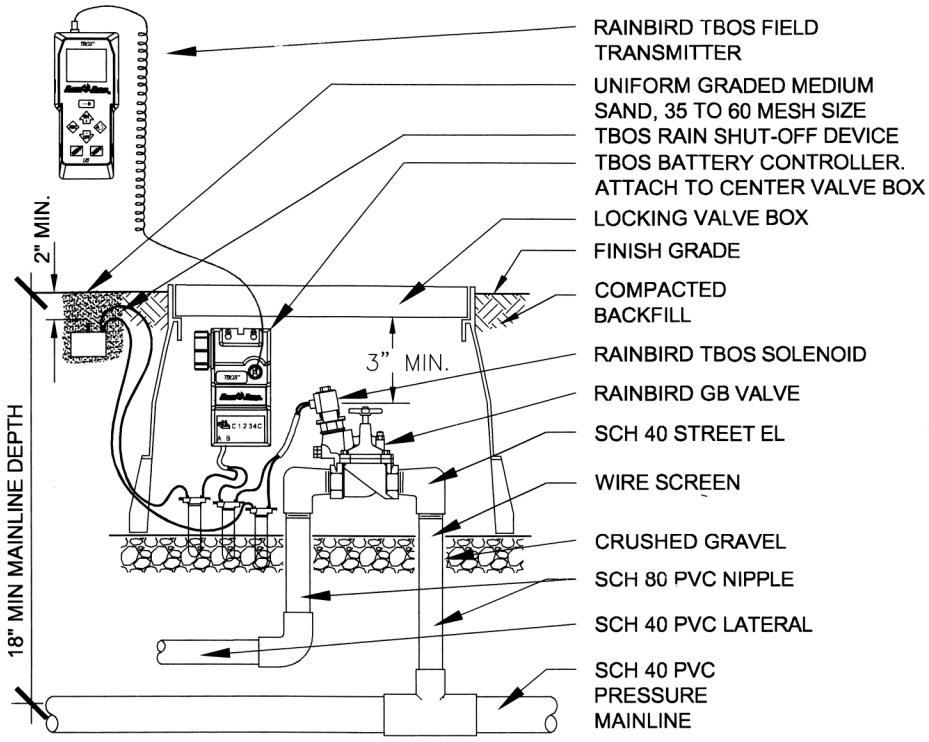

B VALVE, CONTROLLER AND RAIN SHUTOFF SWITCH

NOT TO SCALE

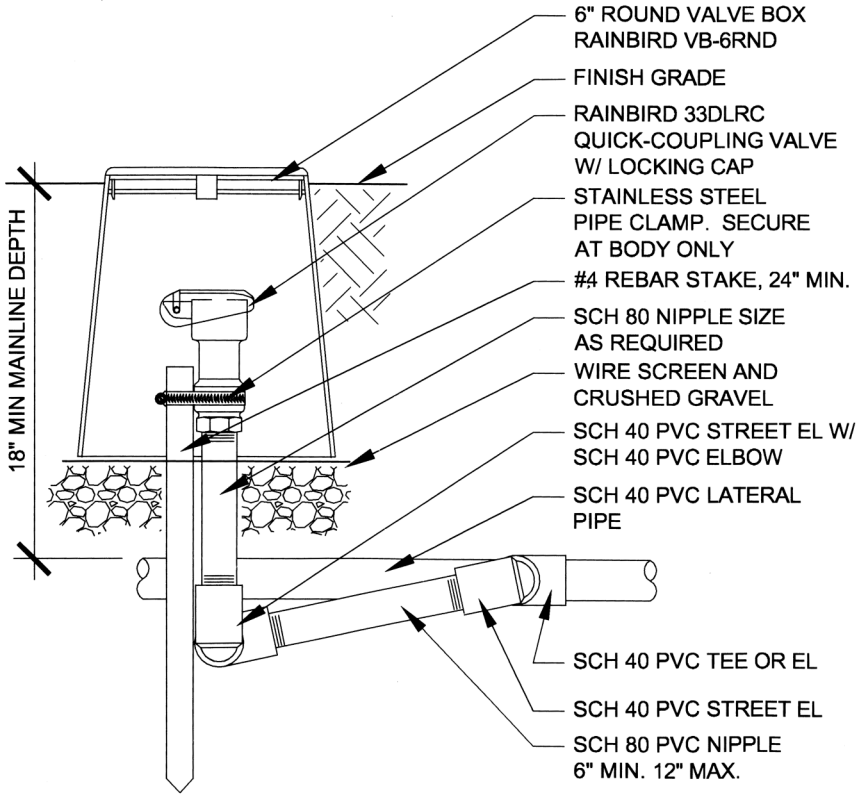

C QUICK CONNECT

NOT TO SCALE

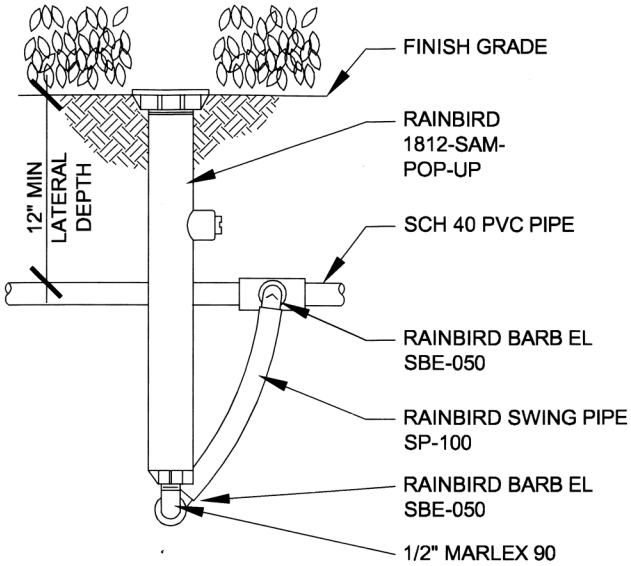

D 12" POP-UP SPRINKLER

NOT TO SCALE

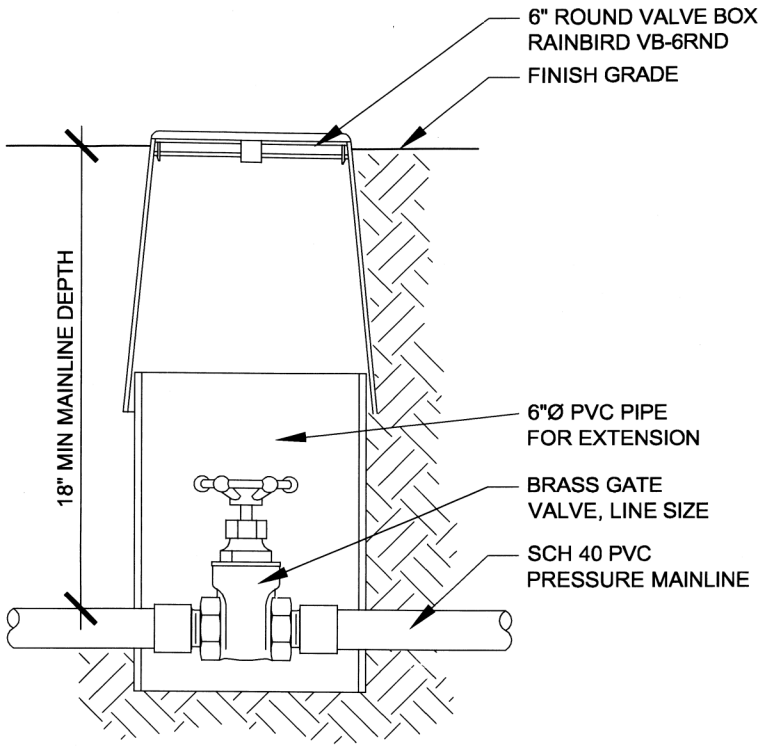

E BRASS GATE VALVE

NOT TO SCALE

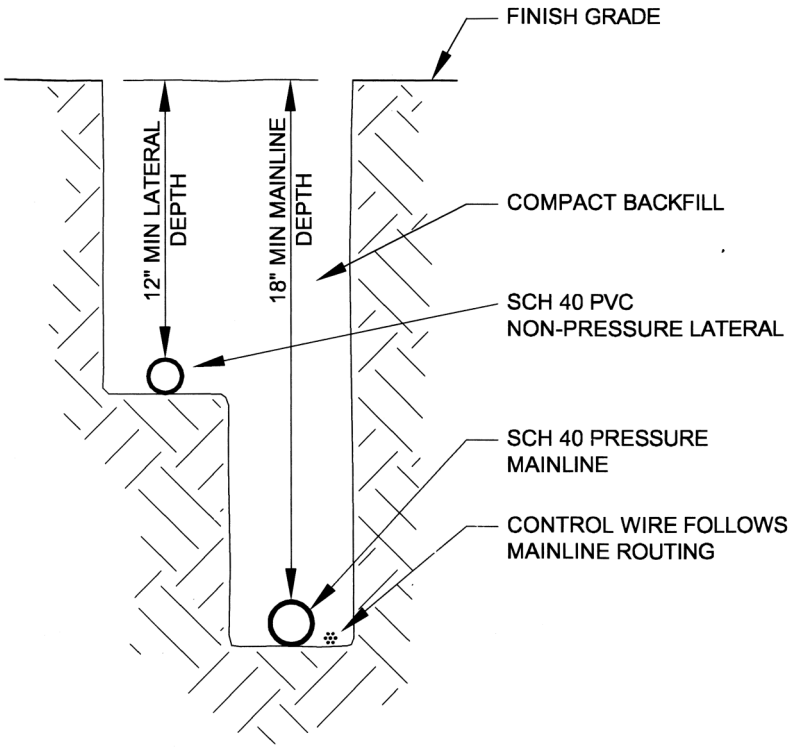

F MAINLINE AND LATERAL TRENCHING

NOT TO SCALE

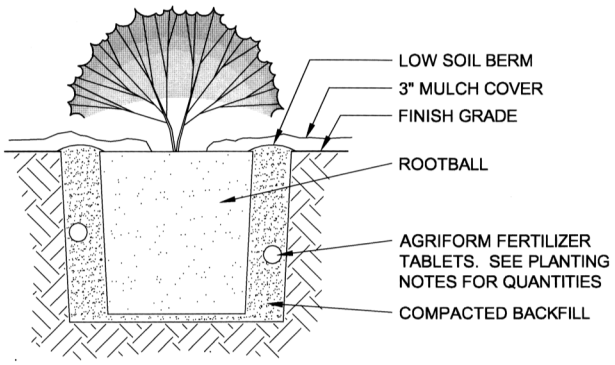

G SHRUB PLANTING DETAIL

NOT TO SCALE

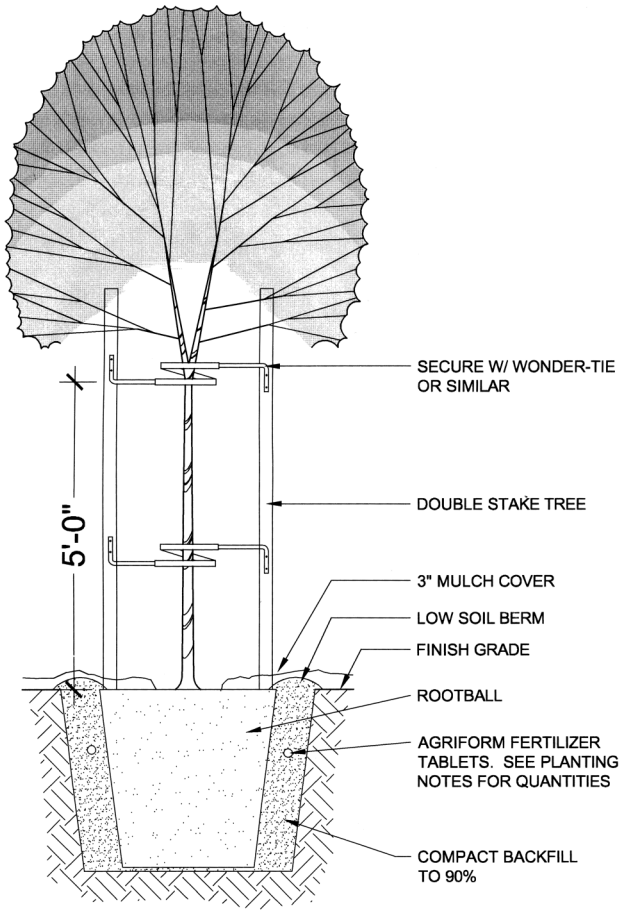

H TREE PLANTING DETAIL

NOT TO SCALE

Appendix C

Stormwater System Details

Wager Company

- http://www.wagerco.com/nds/nds_index.html
- http://www.wagerco.com/nds/drainage/drainage.html

NDS

- Flo-well
- http://www.ndspro.com/
- http://www.ndspro.com/files/POED_QRI.pdf

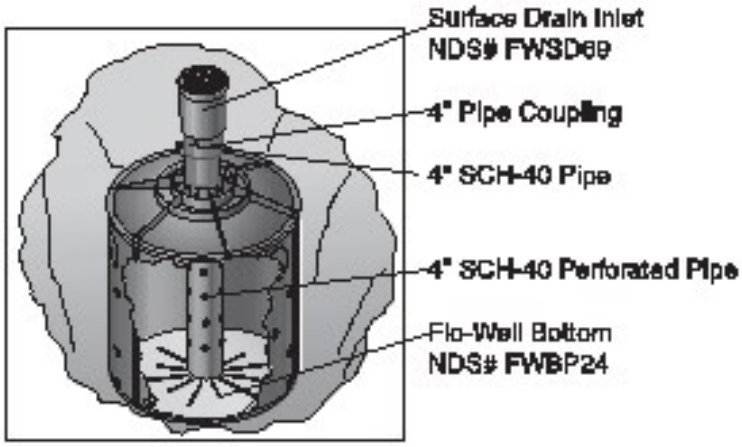

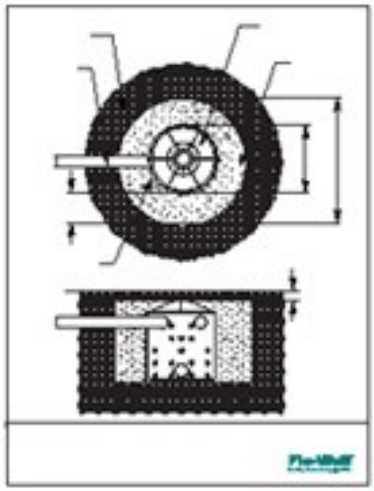

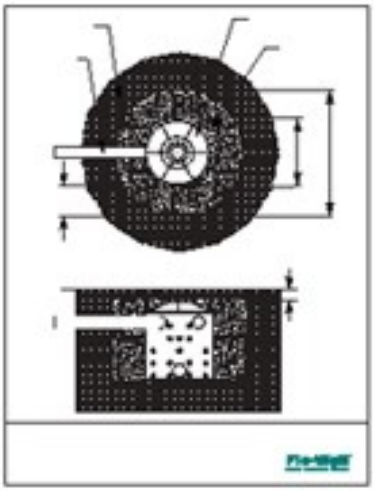

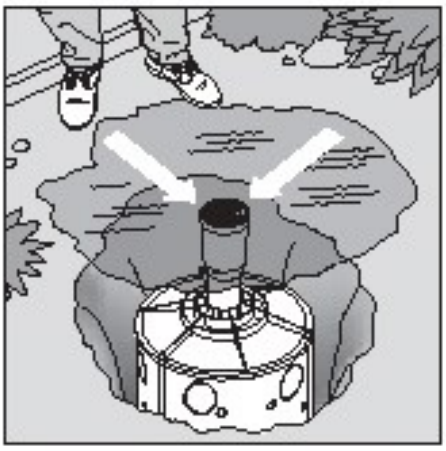

OPTIONS

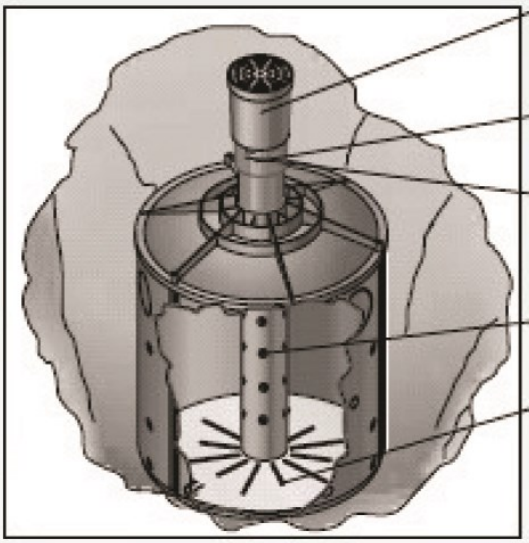

For additional support

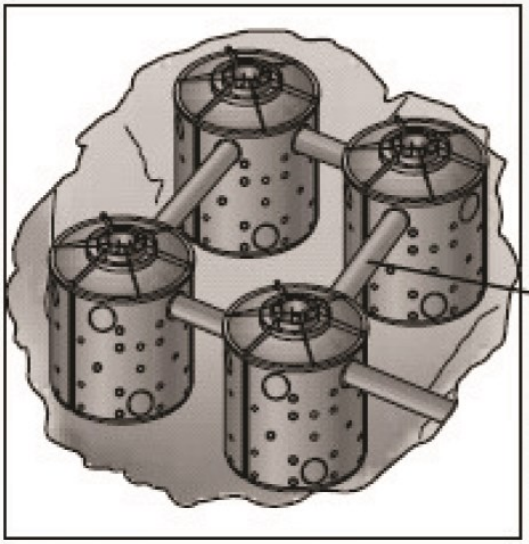

4" SCH-40 Pipe

Flo-Well Side Panels
NDS#FWSPS3

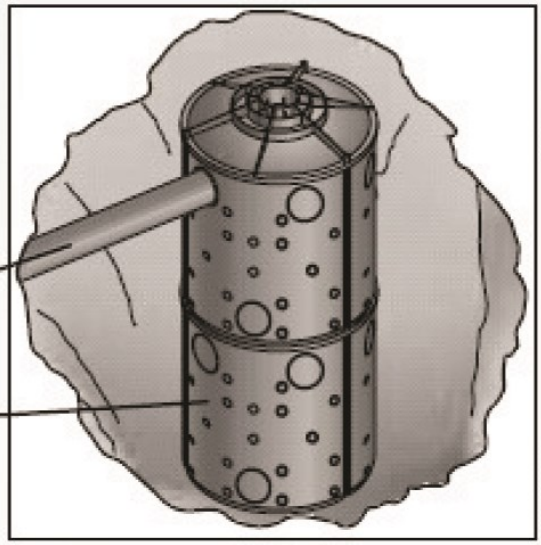

Can be connected

Can be stacked

Appendix D

Maintenance Monitoring Checklist

Maintenance Checklist Schedule

pg.	Task	January	February	March	April	May	June	July	August	September	October	November	December
3	**Soil testing**												
4	Fertilization	no	never	not	no	never	not	no	never	not	no	never	not
5	Mulch replacement		check/add				check/add				check/add		
6	**Irrigation equipment - check**	weekly	weekly	weekly	weekly	weekly	weekly	weekly	weekly	weekly	weekly	weekly	weekly
8	Soil moisture monitoring	as	needed	as	needed	as	needed	as	needed	as	needed	as	needed
7	Backflow preventet certification	X											
9	Stormdrain inlets - keep clear of gravel/mulch	as	needed	as	needed	as	needed	as	needed	as	needed	as	needed
16	**Tree maintenance**	check guy wires	check guy wires	check guy wires	check guy wires	check guy wires	check guy wires	check guy wires	check guy wires	check guy wires	check guy wires	check guy wires	check guy wires
18	*Cercis occidentalis* (western redbud)		prune if needed	prune if needed									
19	*Platanus racemosa* (western sycamore)	prune if needed	prune if needed										prune if needed
20	*Quercus agrifolia* (coast live oak)							prune if needed	prune if needed	prune if needed			
21	*Quercus engelmannii* (Engelmann oak)								prune if needed	prune if needed			
22	**Shrubs and perennials**												
23	*Ceanothus* 'Dark Star' (Dark Star ceanothus)		prune/pinch back	prune/pinch back									
23	*Eriogonum grande* var. *rubescens* (red buckwheat)						dead head	dead head	dead head	dead head	dead head		
24	*Lessingia* 'Silver Carpet' (Silver Carpet California aster)										dead head	dead head	pinch lightly
24	*Mimulus aurantiacus* (red monkeyflower)		pinch lightly		pinch lightly	prune flwr stems							pinch lightly
25	*Muhlenbergia capillaris* (pink hairgrass)					prune if needed							
25	*Penstemon eatonii* (Eaton's penstemon)							cut back hard	cut back hard				
26	*Penstemon spectablis* (showy penstemon)							cut back hard	cut back hard				
26	*Ribes aureum* (golden currant)				prune								
27	*Salvia* 'Bee's Bliss' (Bee's Bliss creeping sage)												prune
27	*Salvia clevelandii* (Cleveland sage)	prune											
28	*Salvia mellifera* 'Terra Seca' (Terra Seca black sage	prune											
29	*Salvia spathacea* (hummingbird sage)			dead head ?	dead head ?	dead head ?	dead head ?						
30	*Trichostema lanatum* (woolly blue curls)	dead head ?	dead head ?	dead head ?	dead head ?	dead head ?	dead head ?	dead head ?	dead head ?	dead head ?	dead head ?	dead head ?	dead head ?
30	*Zauschneria californica* (California fuchsia)	prune	prune			remove seedlings		remove seedlings					
31	**Annuals (all)**												
31	*Eschscholzia californica* (California poppy)						pull by hand?	pull by hand?				seed	
31	*Nemophila menziesii* (baby blue eyes)						pull by hand?	pull by hand?				seed	
3	**Replace dead or dying plants**	plant										plant	plant
35	**Weed management**												
36	hand pulling	weekly	weekly	weekly	weekly	weekly	weekly	weekly	weekly	weekly	weekly	weekly	weekly
42	oil sprays	as	needed	as	needed	as	needed	as	needed	as	needed	as	needed
43	**Pest management**												
43	Vertebrates (rodents, etc.)	weekly	weekly	weekly	weekly	weekly	weekly	weekly	weekly	weekly	weekly	weekly	weekly
43	Invertebrates (ants, slugs)	weekly	weekly	weekly	weekly	weekly	weekly	weekly	weekly	weekly	weekly	weekly	weekly
44	**Hardscape management**	as	needed	as	needed	as	needed	as	needed	as	needed	as	needed
45	Graffiti	weekly	weekly	weekly	weekly	weekly	weekly	weekly	weekly	weekly	weekly	weekly	weekly
46	**Litter management**	weekly	weekly	weekly	weekly	weekly	weekly	weekly	weekly	weekly	weekly	weekly	weekly
46	**Greenwaste management**	as	needed	as	needed	as	needed	as	needed	as	needed	as	needed

? - optional

Appendix E

Emergency Contacts

Contacts

ALL EMERGENCY CALLS: 911

Non-emergency calls: 211

Be prepared to provide the following information:

- ### Location

  Exact address and nearest Street and Cross-street – describe location as accurately as possible.

  Example: 2100 N. Marengo Avenue, Altadena
  South of Woodbury Road, on east side of Marengo Avenue

- ### Nature of the call

  Describe the type of incident as accurately as possible.

Example:	Large item pickup request	use 211
	Graffiti	211
	Vehicle incident	911
	Medical emergency	911
	Accidental fire	911

The park is in unincorporated Los Angeles County. When in doubt, call 211.

The following offices and departments should be notified to report and/or correct problems in the park:

Graffiti Removal Hotline	(800) 675-4357 (steamer)
Graffiti Hotline	(800) 78CRIME (782-7463)
Mulch City of Pasadena (Steven's Tree Experts)	(626) 794-6911

BIBLIOGRAPHY

Bell, Carl and Dean Lehman. 2005. *Best Management Practices for Vegetation Management*. Ellen Mackey, editor. Los Angeles Weed Management Area. Los Angeles, California. http://acwm.lacounty.gov/pdf/WeedBMPres.pdf.

Bornstein, Carol, Davis Fross, and Bart O'Brien. 2005. *California Native Plants for the Garden*. Cachuma Press. Los Olivos, California.

DiTomaso, Joseph, and Evelyn Healy. 2007. *Weeds of California and Other Western States. Volumes 1 & 2*. University of California, Division of Agriculture and Natural Resources, Publication 3488. (http://anrcatalog.ucdavis.edu/IntegratedPestManagement/3488.aspx)

Flint, Mary Louise. 1998. *Natural Enemies Handbook, The Illustrated Guide to Biological Pest Control.* Statewide Integrated Pest Management Project, University of California, Division of Agriculture and Natural Resources, University of California Press, Berkeley, California.

Flint, Mary Louise 2001. *IPM in Practice, Principles and Methods of Integrated Pest Management*. Statewide Integrated Pest Management Project, University of California, Division of Agriculture and Natural Resources, Publication 3418.

Las Pilitas Nursery. 2007. http://www.laspilitas.com/plants/plants.htm. Accessed May 2007.

Los Angeles Co. Department of Public Works. 2004. *Los Angeles River Master Plan, Landscaping Guidelines and Plant Palettes*. Ellen Mackey, editor. Los Angeles Department of Public Works. http://ladpw.org/wmd/watershed/LA/LAR_planting_guidelines_webversion.pdf

Los Angeles Co. Department of Public Works. In preparation. *Los Angeles River landscape Maintenance Manual*. Los Angeles Department of Public Works.

Magnolia Gardens Nursery. 2007. http://www.magnoliagardensnursery.com/productdescrip/Muhly_Gulf.html. Accessed May 2007.

Michigan Dept. of Natural Resources. 2004. *Tree Maintenance Guidelines*. http://www.midnr.com/Publications/pdfs/ForestsLandWater/UrbanAndCommunity/IC4108-1TreeMaintenanceguidelines031904.pdf. Accessed June 2007.

O'Brien, Bart C. 2001. *California Native Plant Gardens Care and Maintenance*. Rancho Santa Ana Botanic Garden, Claremont, California.

O'Brien, Bart, Betsey Landis, and Ellen Mackey. 2006. *Care & Maintenance of Southern California Native Plant Gardens. Cuidado y mantenimiento de jardines de plantas natives del sur de California.* Pages/paginas: viii, 238. Metropolitan Water District of Southern California, Los Angeles, California.

Rancho Santa Ana Botanic Garden. *Five Steps to Weed Control Through Solarization*. http://www.rsabg.org/images/stories/horticulture/RSABG_Solarization.pdf. Accessed May 2007.

Salyards, James R., Richard Y. Evans, and Alison M. Berry. 2003. *Mycorrhizal Development and Plant Growth in Inoculated and Non -Inoculated Plots of California Native Grasses and Shrubs* in Native Plant Network. http://www.nativeplantnetwork.org/Content/Articles/4-2NPJ143-149.pdf. Accessed November 2009.

TreePeople. 2005. *Trees are Good, Tree Care Information*. http://www.treesaregood.com/treecare/pruning_mature.aspx. Accessed June 2007.

TreePeople. 2007. *Rainwater as a Resource: A Report on Three Sites Demonstrating Sustainable Stormwater Management.* Los Angeles, California. Graphic for irrigation system Graphic of as built stormwater system.

UC IPM Online. *Statewide Integrated Pest Management Program*. 2005. How to Manage Pests in Homes, Gardens, Landscapes, and Turf. http://www.ipm.ucdavis.edu/PMG/menu.homegarden.html. Accessed April 2007.

US Environmental Protection Agency. *Integrated Pest Management Principles (IPM)*. http://www.epa.gov/opp00001/factsheets/ipm.htm. Accessed April 2007.